minax

THE LIGHTING FANS
.19

mimax

designers

Ezio Pescatori

Fantasia e curiosità

MBE design

Forma y función

iseecows studio

Mutem i progressem

Mario Mazzer

Eleganz trägt Schwarz

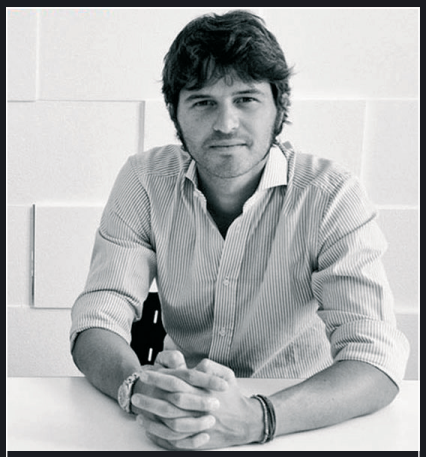

Francesco Favaretto

Ténacité et passion

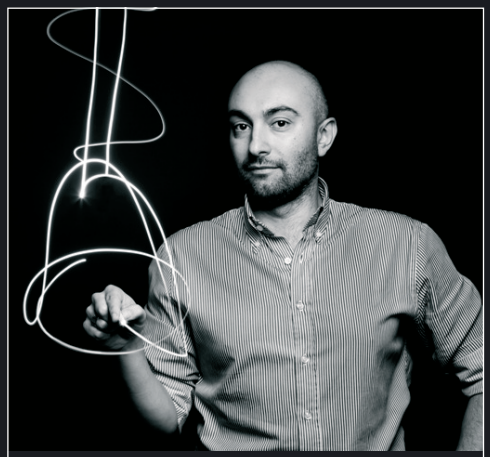

Francesco Sani

Design, a way to success

4

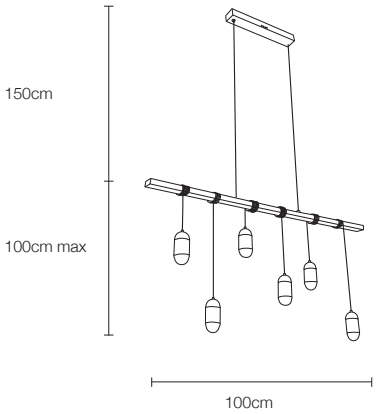

inflexus

by **iseecows studio**

1950 lumens 24W al acr

LED

inflexus

6

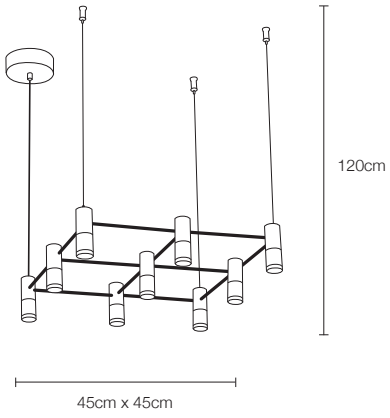

orion

by **mbe design**

9 x G4 3W (27W) (not incl.)

al acr

LED

orion

8

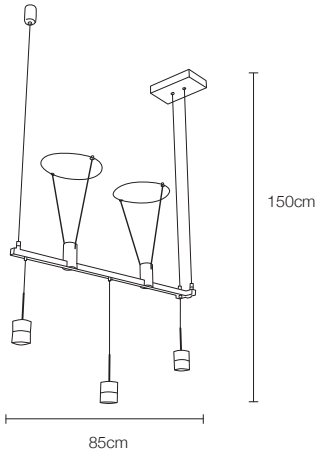

duplex

by **mimax team**

1950 lumens 25W al acr

LED

duplex

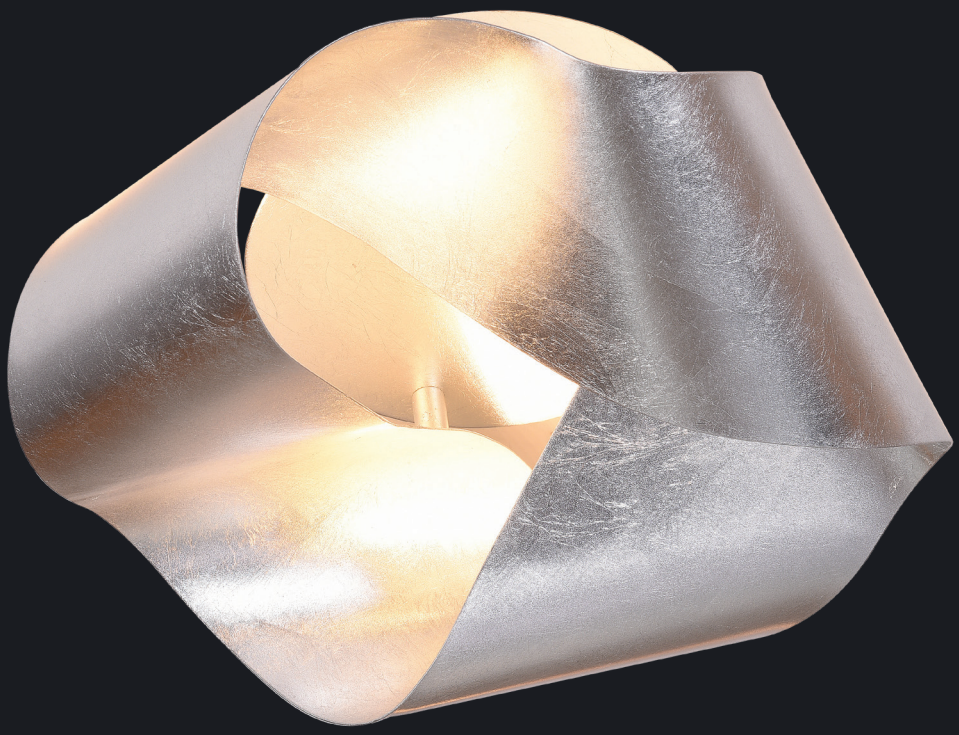

10

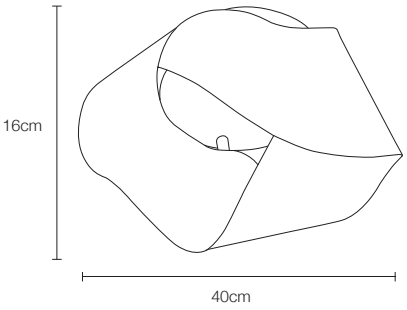

drive

by **mimax team**

1650 lumens 20W st

LED

drive

12

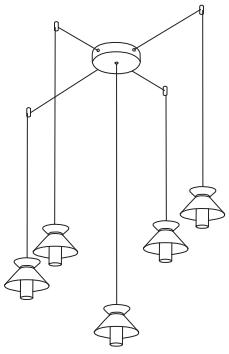

each cable 4m
cada cable 4m

pinnacle

by **iseecows studio**

2150 lumens | 35W | al | acr

LED

pinnacle

14

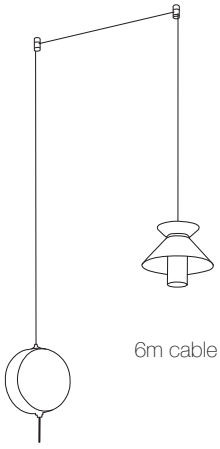

pinnacle W

by **iseecows studio**

650 lumens 7W al acr

opcional (inc.) 2m

LED

pinnacle W

16

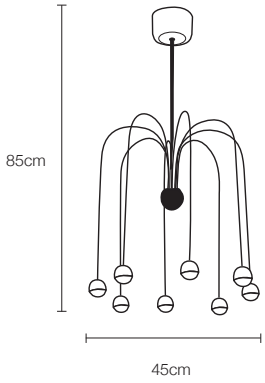

manet

by **mimax team**

1950 lumens 24W

al acr

LED

manet

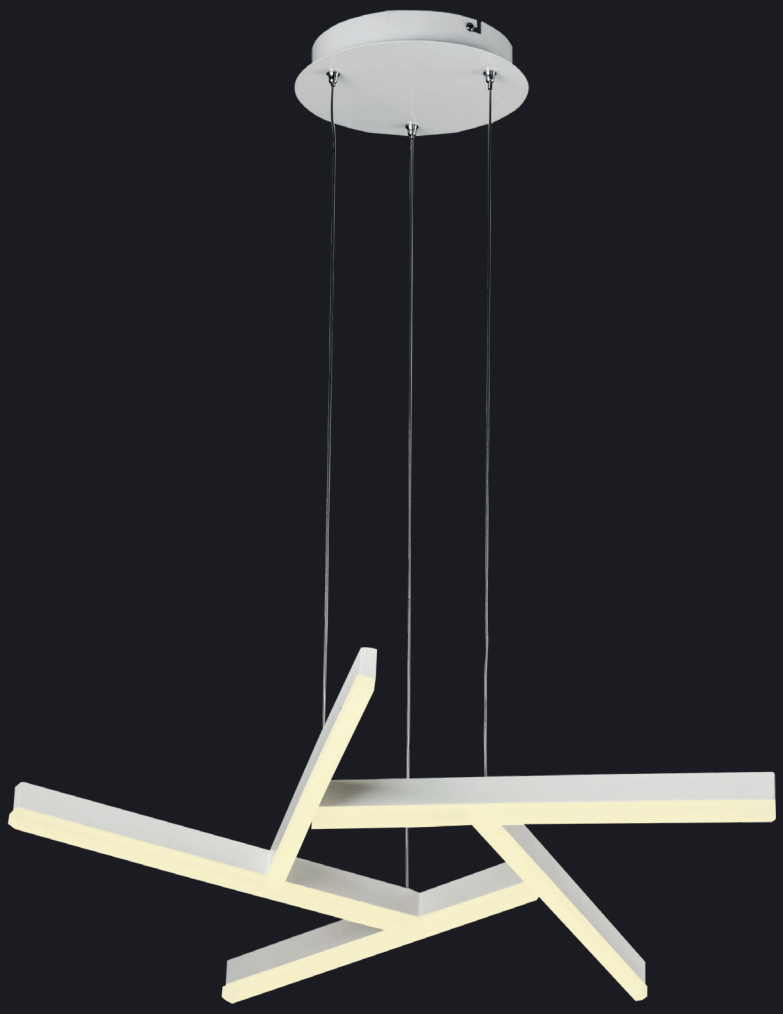

18

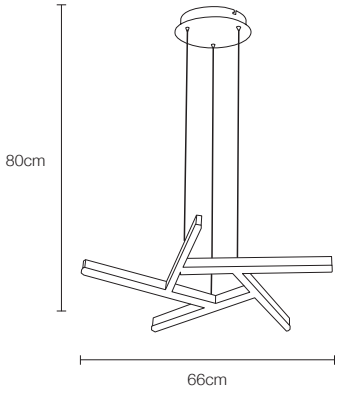

stella

by **mimax team**

3175 lumens 40W

al acr

LED

stella

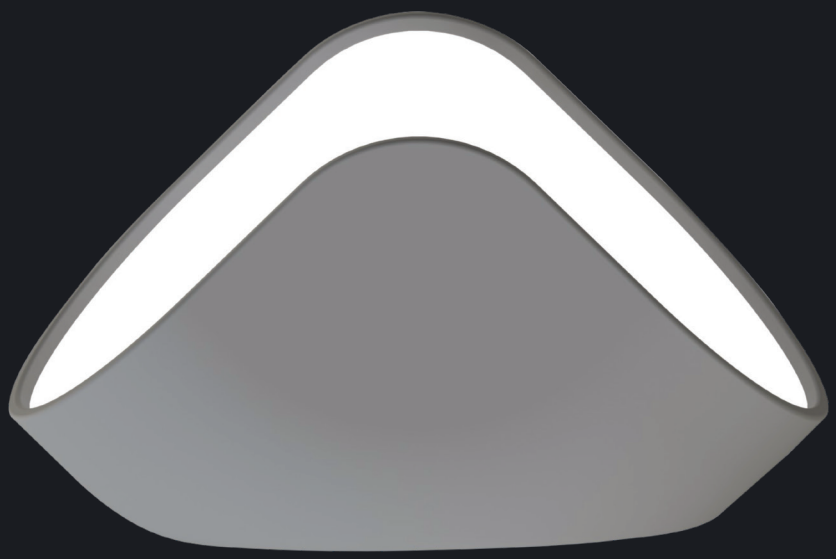

20

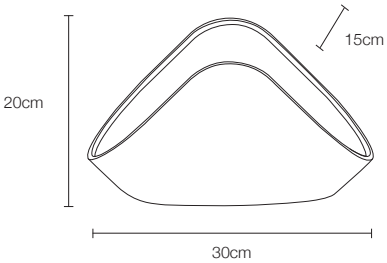

trivial

by **ezio pescatori**

1150 lumens 14W

al pc

LED

trivial

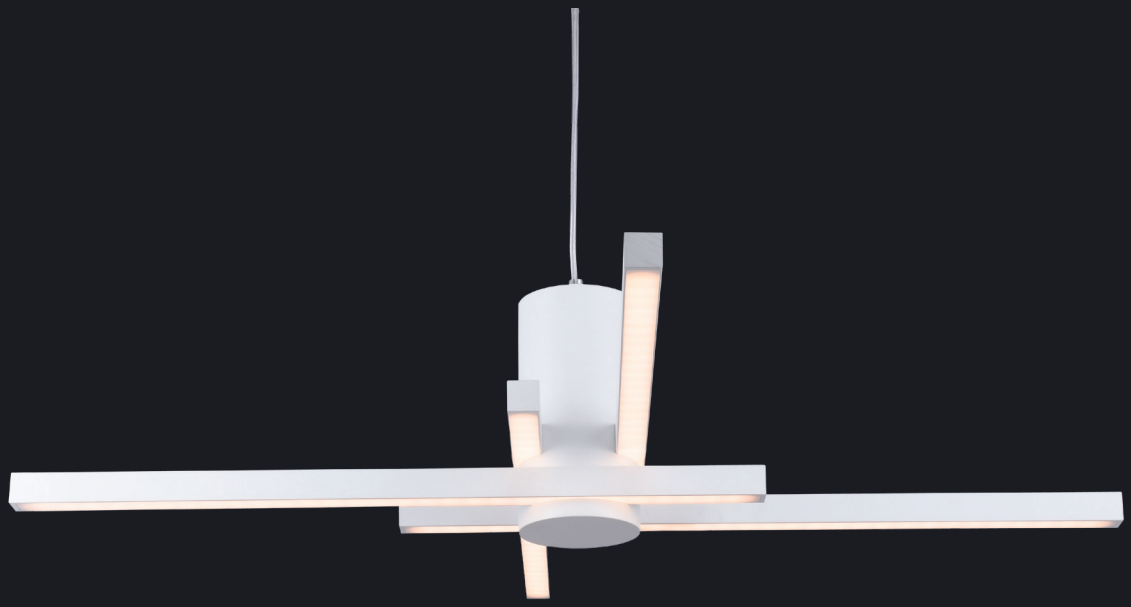

22

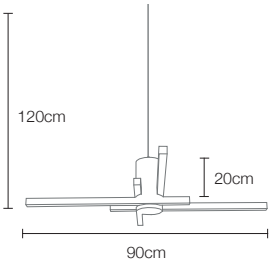

fidelia

by **iseecows studio**

2750 lumens 48W st pc

LED

fidelia

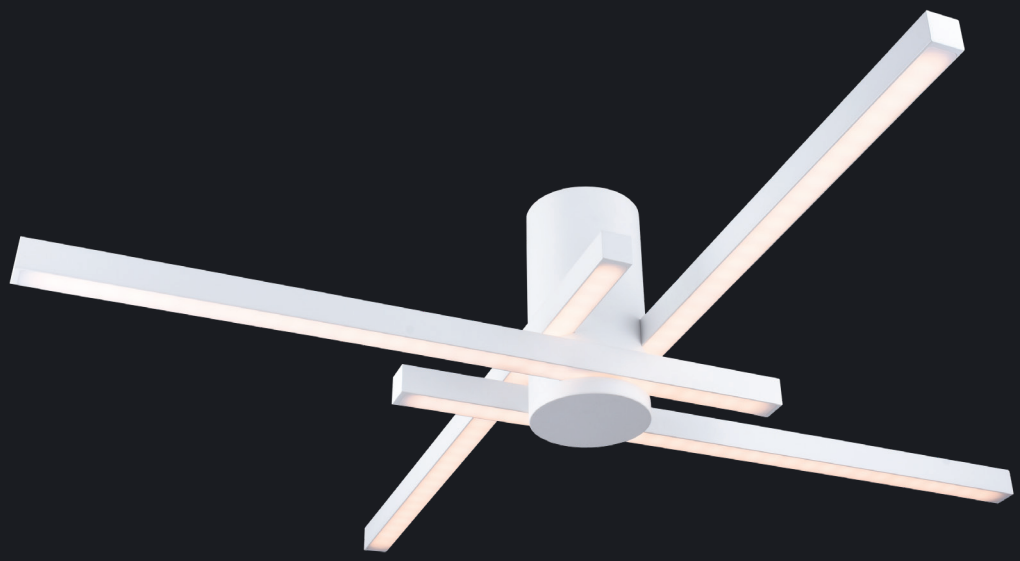

24

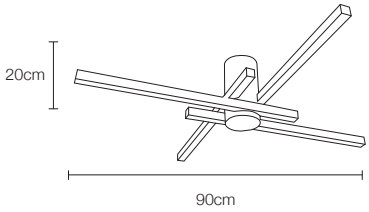

fidelia 2

by **iseecows studio**

2750 lumens 48W st pc

LED

fidelia 2

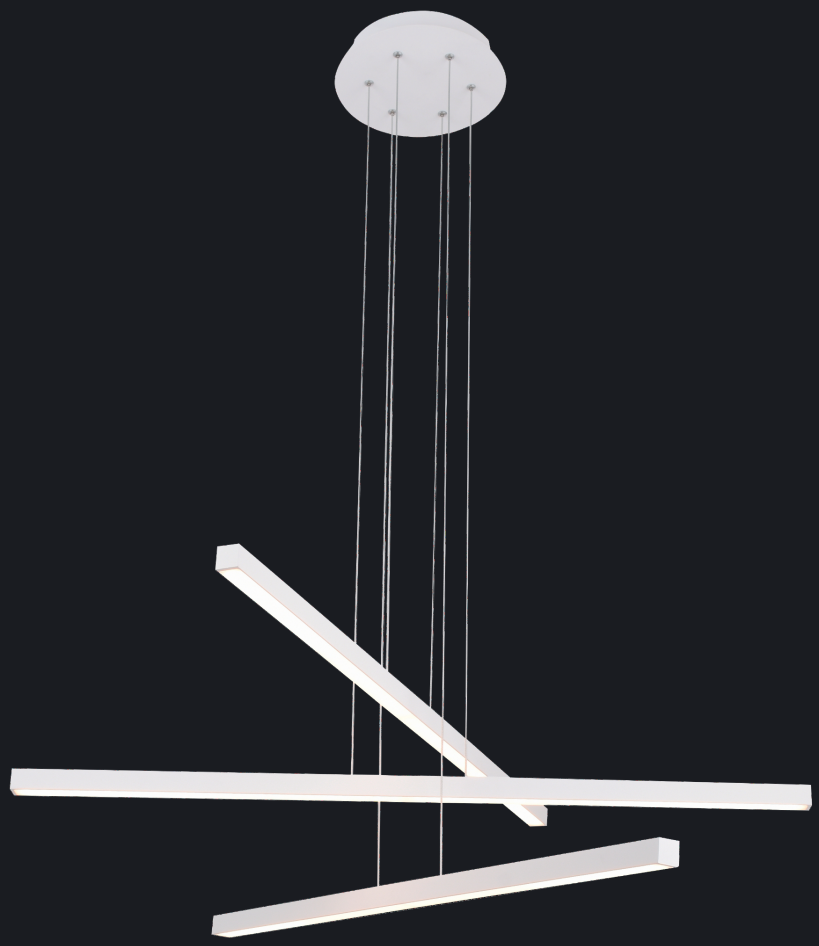

26

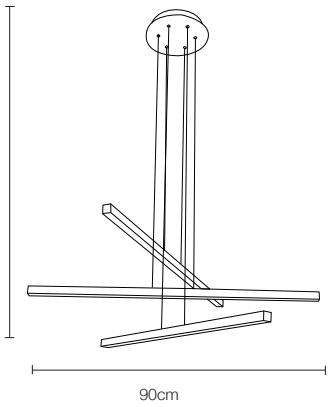

fidelia 3

by **iseecows studio**

2750 lumens 48W st pc

LED

fidelia 3

28

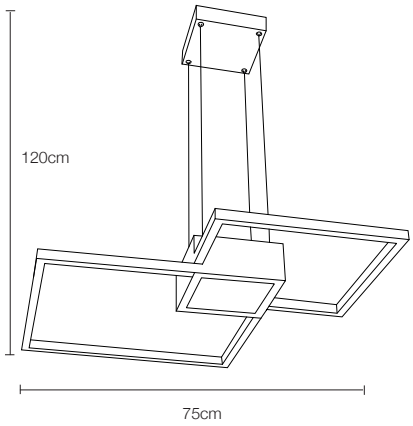

armonia

by **mimax team**

2750 lumens 45W

st pc

LED

armonia

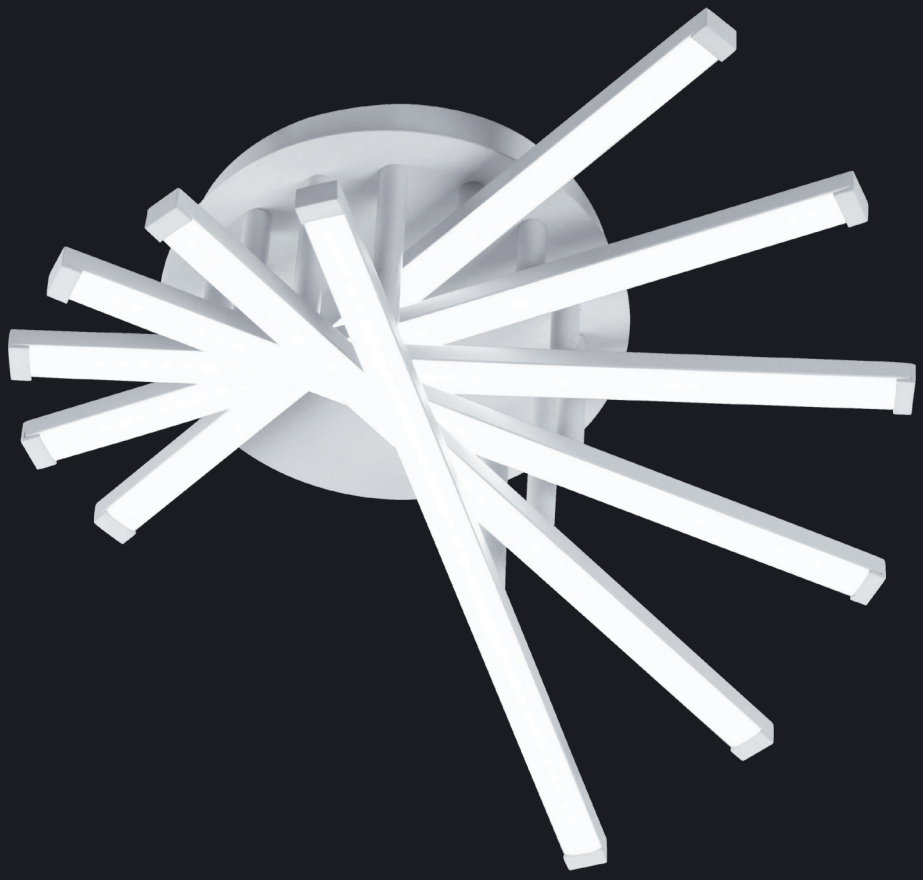

30

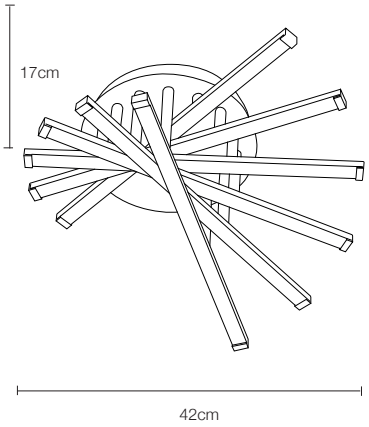

xaloc

by **mbe design**

2750 lumens 48W

al pc

LED

xaloc

32

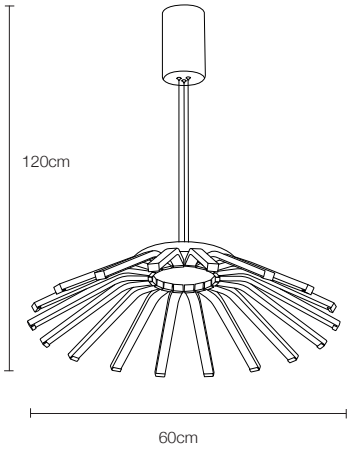

gregal

by **mbe design**

4985 lumens 90W

al pc

LED

gregal

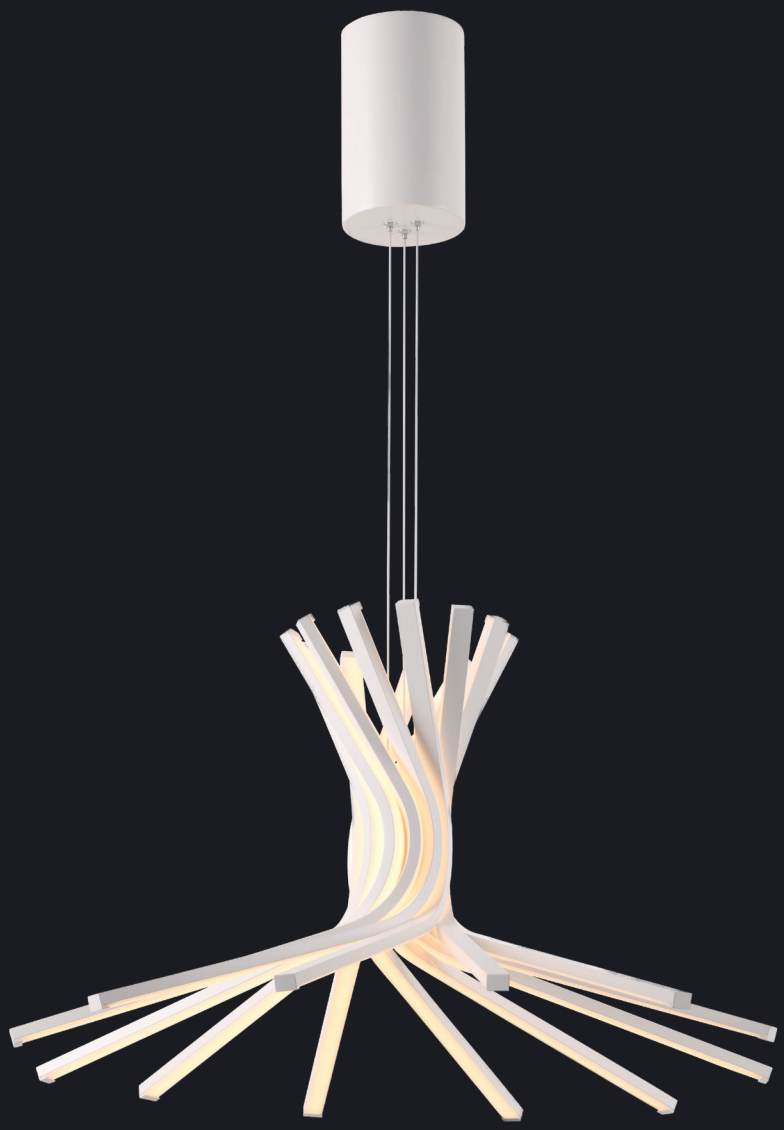

34

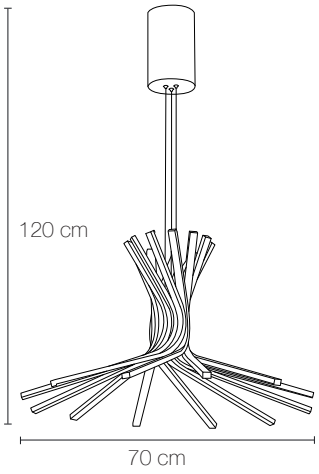

mistral

by **mbe design**

5550 lumens 156W al pc

LED

mistral

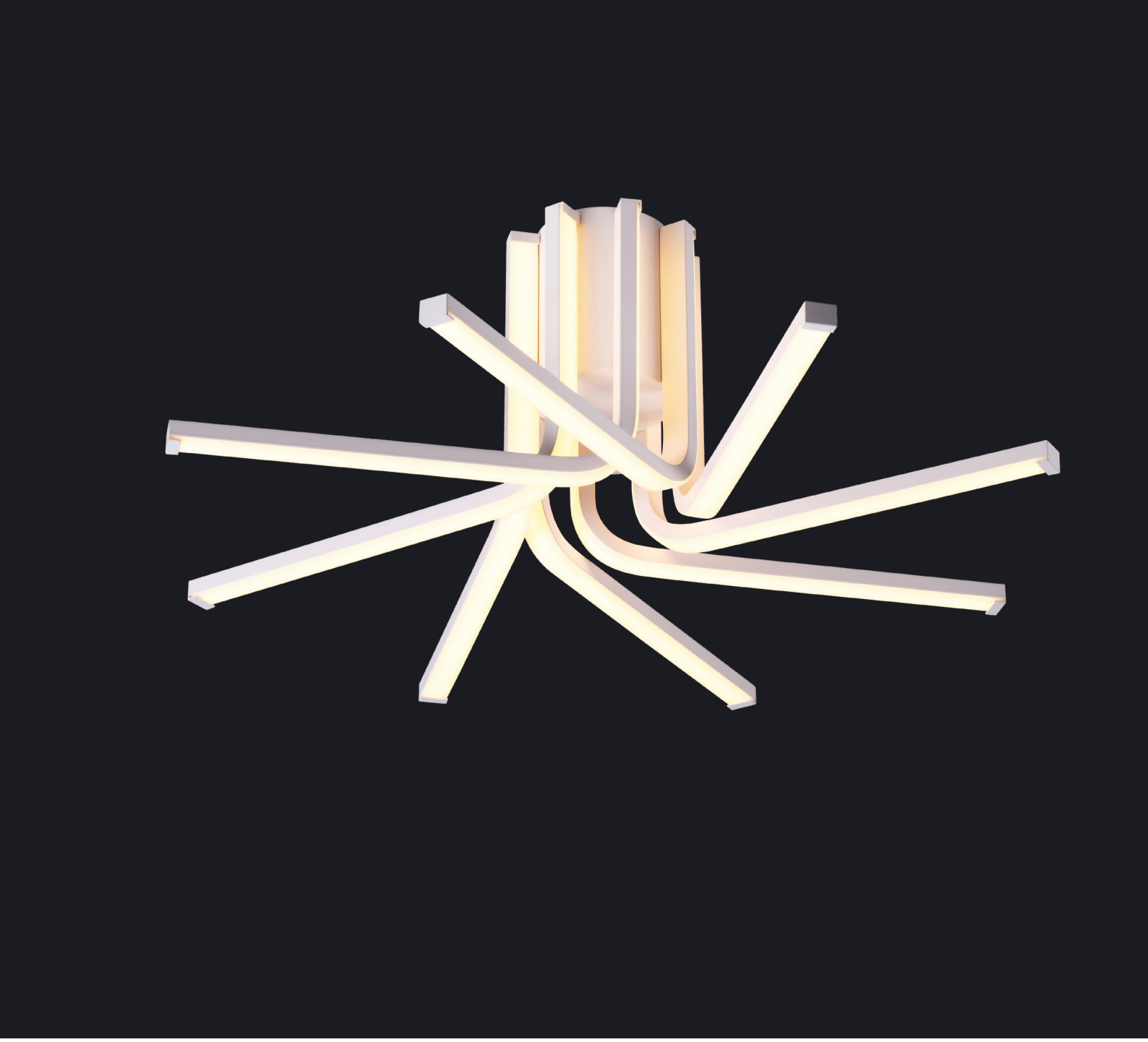

36

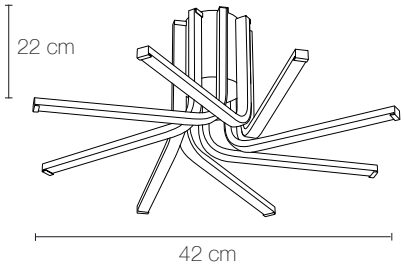

mistral 2

by **mbe design**

3225 lumens 56W al pc

LED

mistral 2

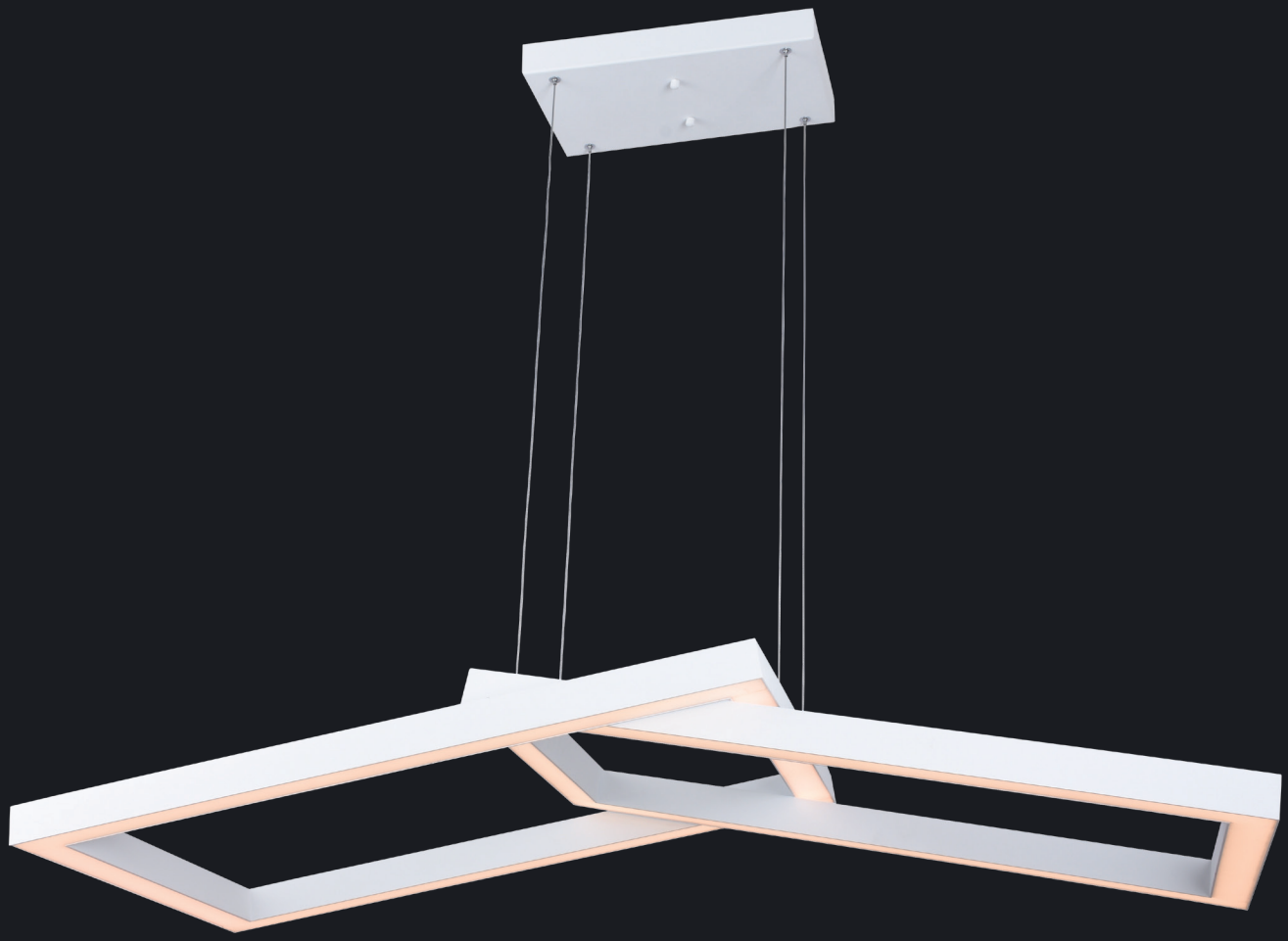

38

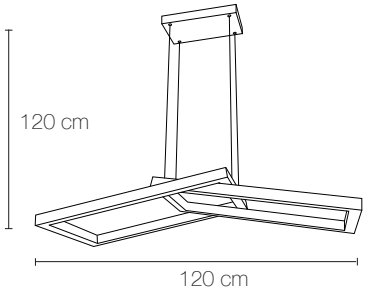

balance

by **Ezio Pescatori**

5125 lumens 96W st pc

LED

balance

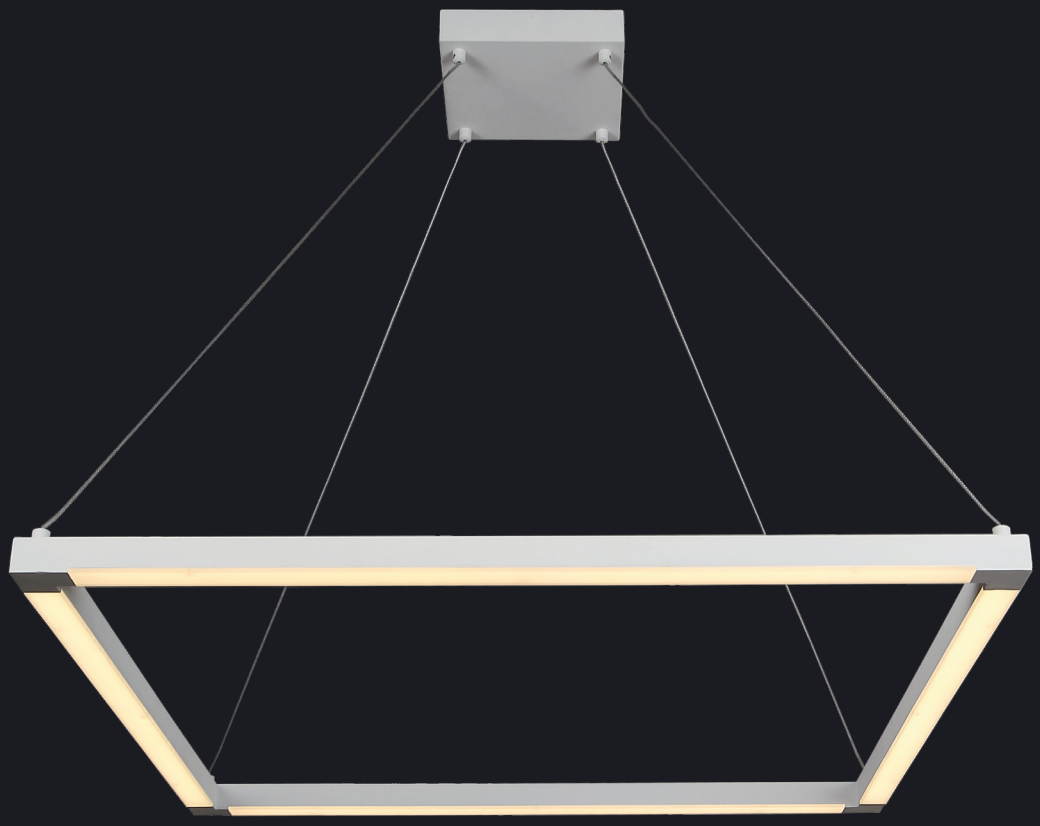

40

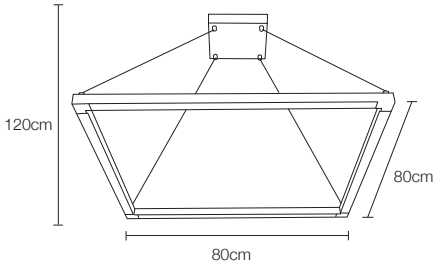

aeris

by **mimax team**

5140 lumens 65W st pc

LED

aeris

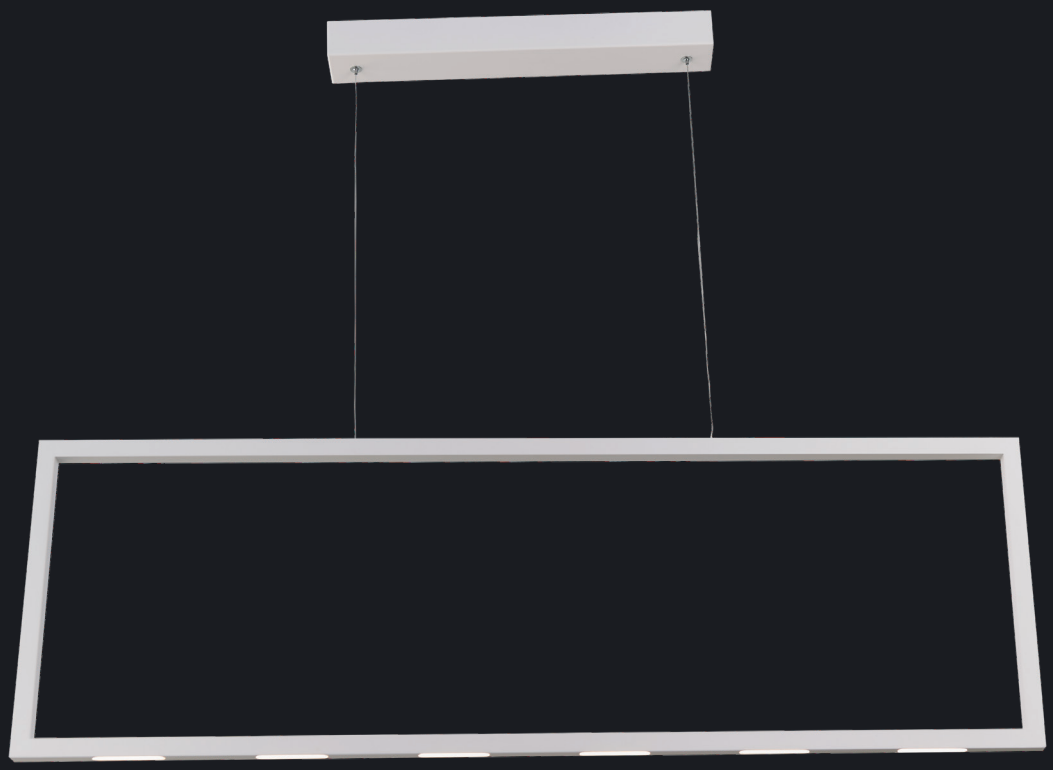

42

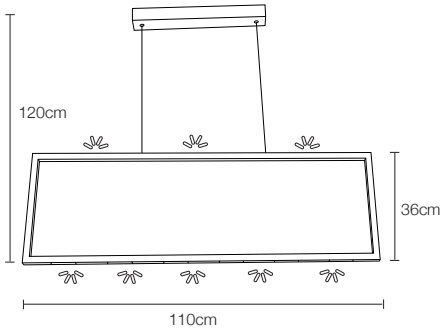

saphir

by **Francesco Sani**

2250 lumens 34W st pc

uplight/downlight

LED

saphir

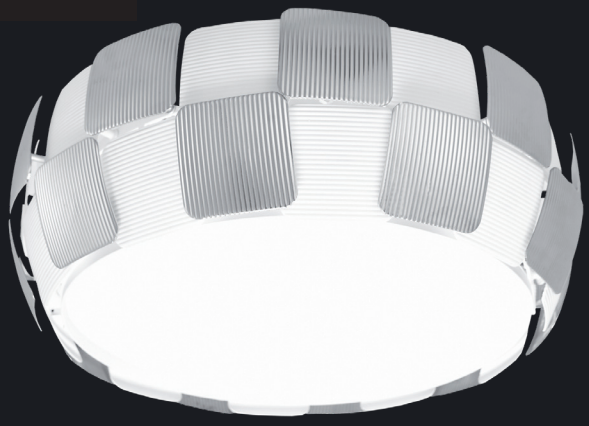

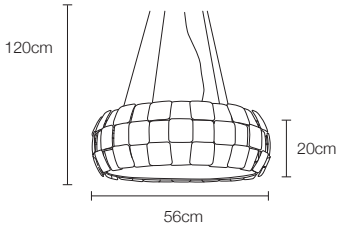

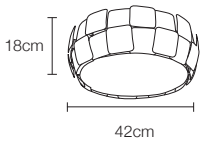

beacon

by **mimax team**

3050 lumens 40W + st pc

beacon 2

by **mimax team**

2460 lumens 25W + st pc

LED

WELCOME

46

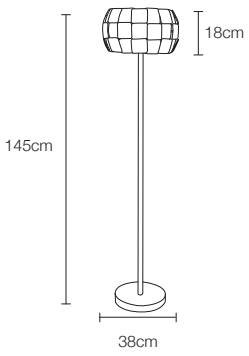

beacon F

by **mimax team**

E27 LED 13W (not incl.)

st pc

LED

beacon F

48

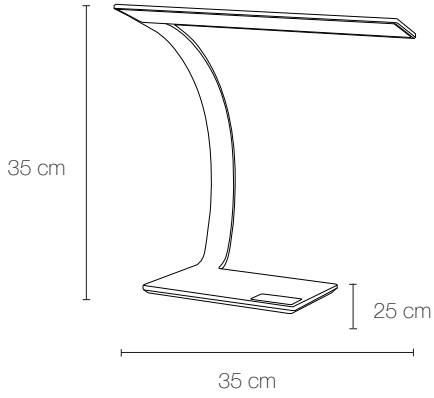

archilux

by **mbe design**

1250 lumens 14W

al pc

2700K 6500K

LED

archilux

archilux by MIMAX LIGHTING

LFI INNOVATION AWARDS

2017

Design Excellence Award

LIGHTFAIR LFI INTERNATIONAL The future. Illuminated. 2017

Philadelphia, USA

50

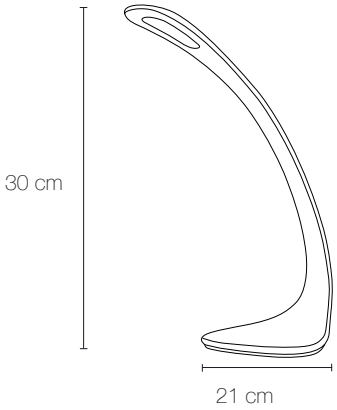

matrix

by **mbe design**

750 lumens 8W

al pc

LED

matrix

52

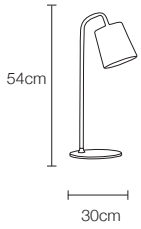

hannah T

by **mimax team**

E27 LED 10W (not incl.)

st

LED

hannah

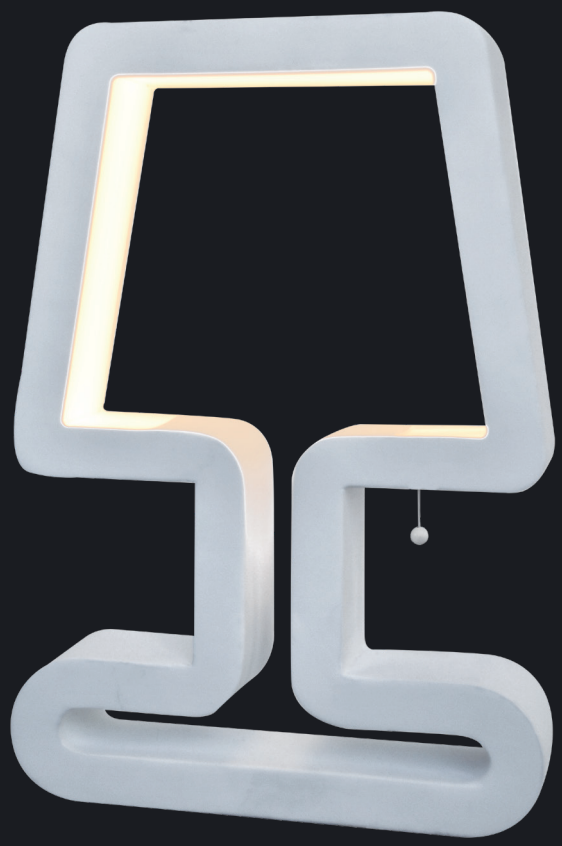

54

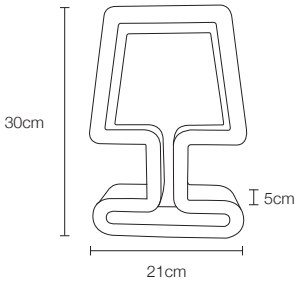

logo

by **mimax team**

758 lumens 12W st pc

logo B

by **mimax team**

758 lumens 12W st pc

LED

logo

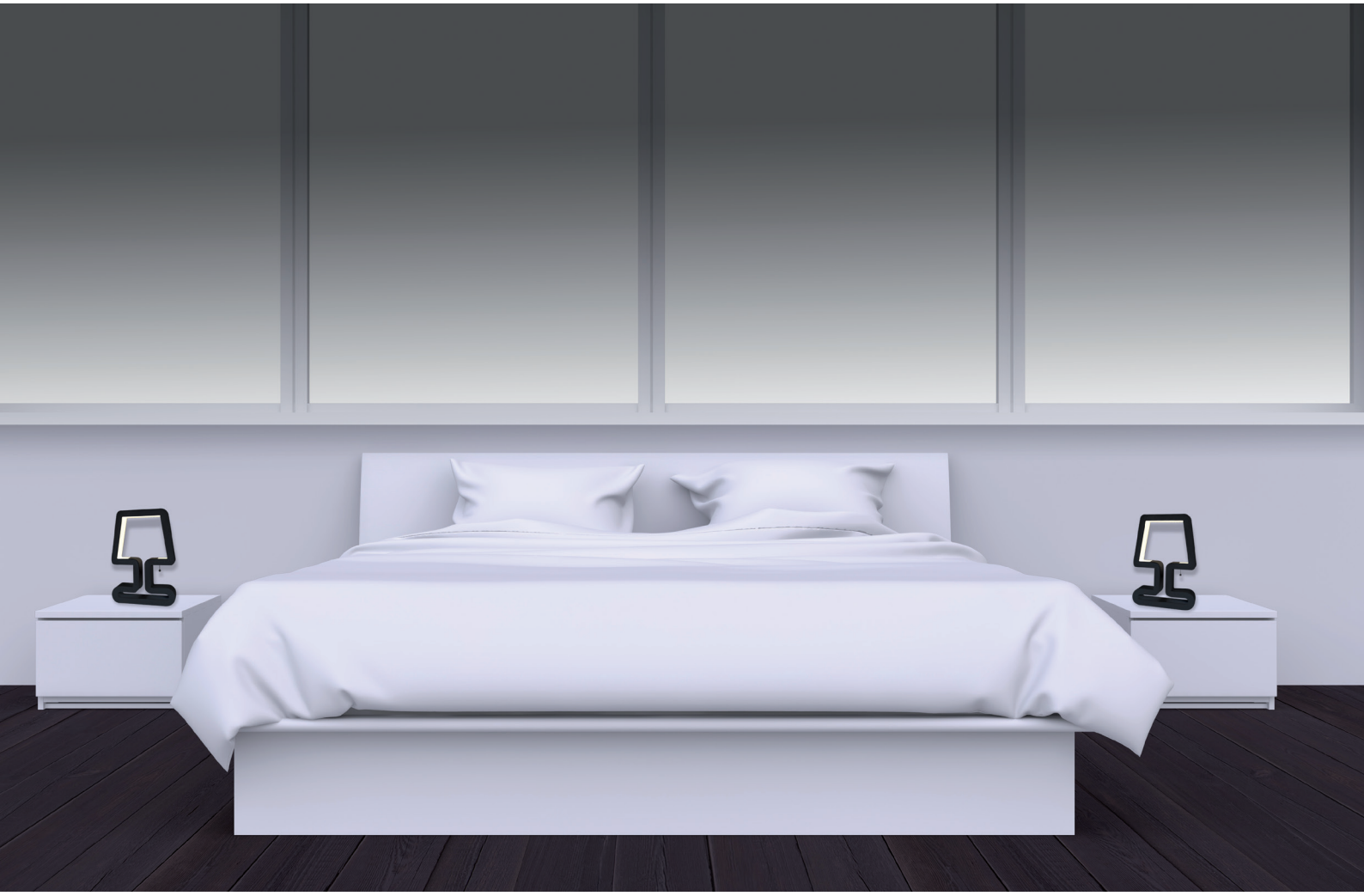

56

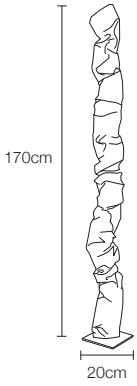

baculus

by **mimax team**

1390 lumens

15W

al

tex

RGB

LED

baculus

58

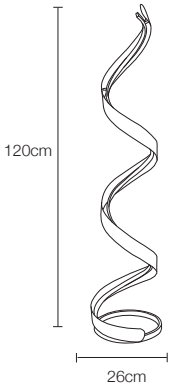

phoenix F

by **mimax team**

2020 lumens 24W al

LED

phoenix F

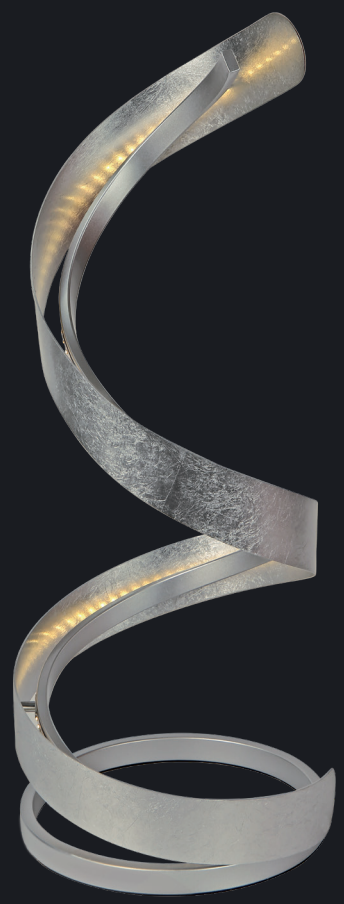

60

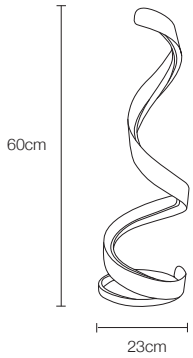

phoenix T

by **mimax team**

1060 lumens 12W al

LED

phoenix T

62

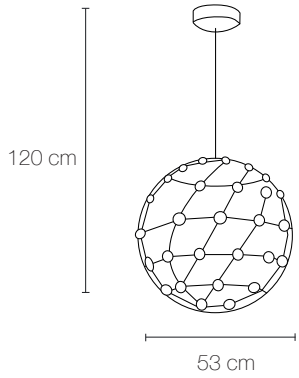

sferika

by **iseecows studio**

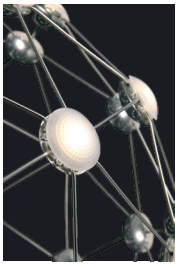

2125 lumens 30W

al pc

LED

sferika

64

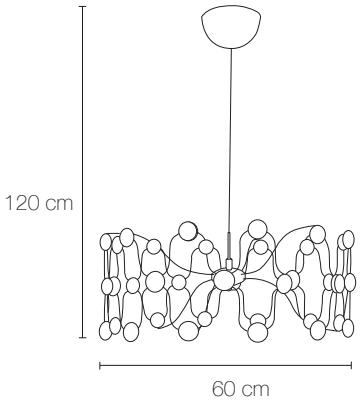

luminika

by **iseecows studio**

1525 lumens 18W

al pc

LED

luminika

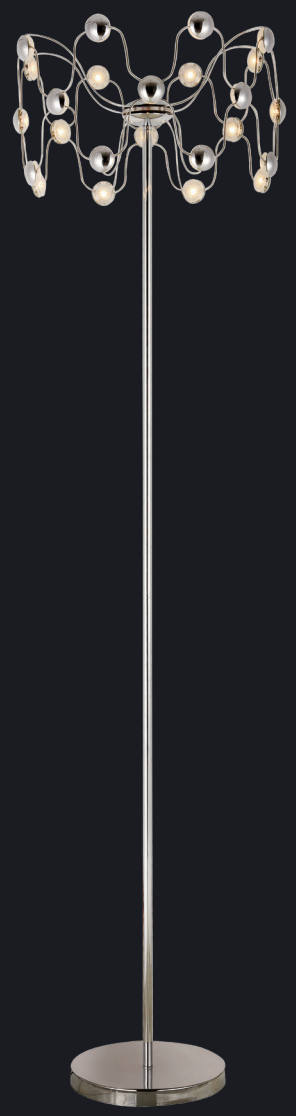

66

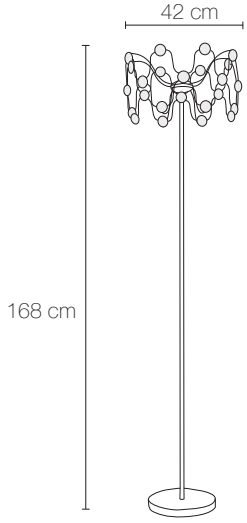

luminika F

by **iseecows studio**

1025 lumens 12W

al pc

LED

luminika F

68

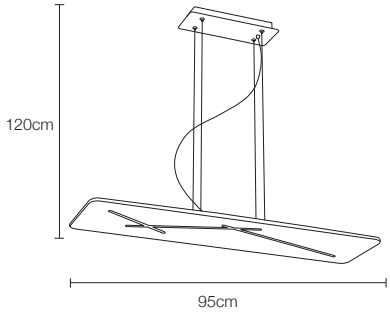

spectrum

by **mimax team**

2100 lumens 26W st pc

LED

spectrum

70

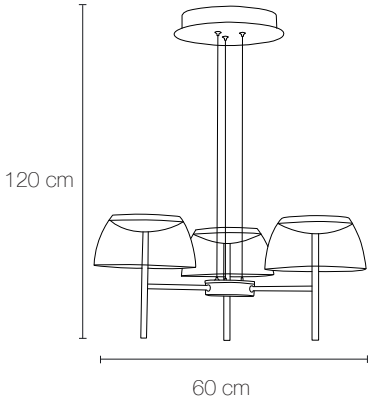

torch

by **mbe design**

2150 lumens 24W

al pc

LED

torch

72

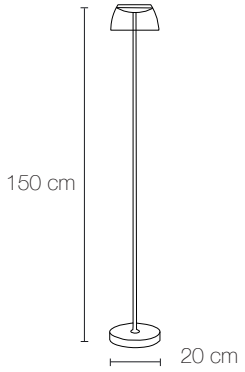

torch F

by **mbe design**

650 lumens 8W

al pc

LED

torch T

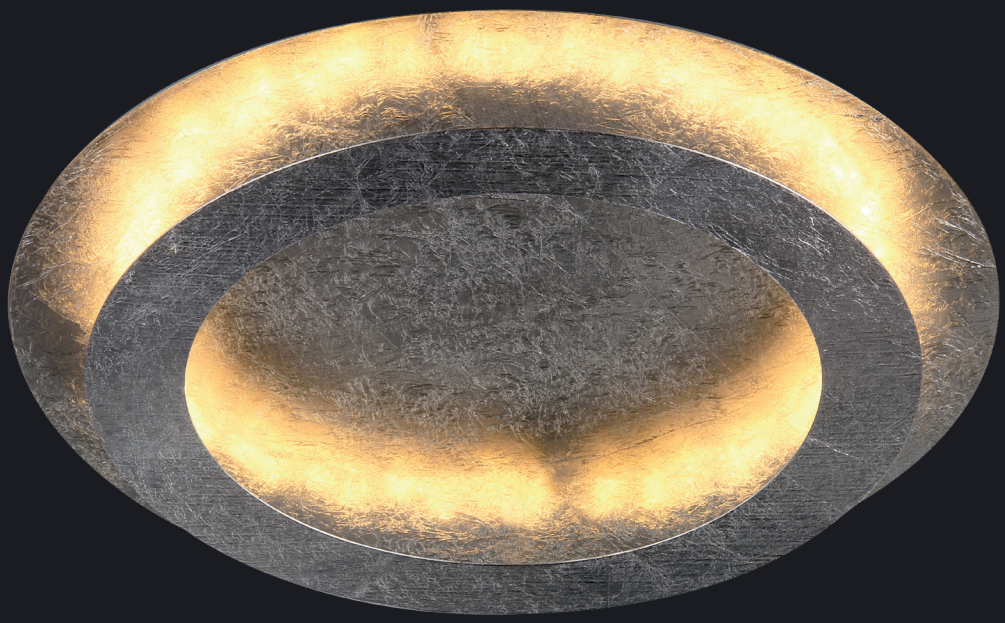

74

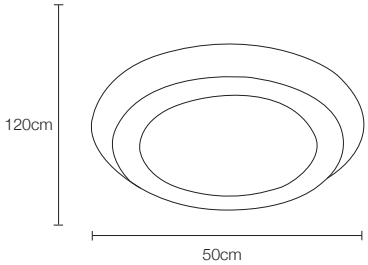

rodium

by **mimax team**

2020 lumens 24W al

* Incluye KIT para montar el plafón como colgante de 1200mm de altura, si se desea
* Includes KIT to mount as pendant ceiling height 1200mm, if desired
* Inclus un KITpour le montage comme suspension de 1200mm, si vous le desirez
* Inkludiert Bausatz um alternativ als Hängeleuchte mit 1200mm Abhängung zu installieren

LED

rodium

76

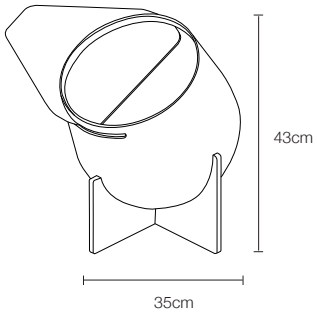

nice

by **Ezio Pescatori**

E-27 LED 13W (not inc.)

360° w st

LED

nice. your way

78

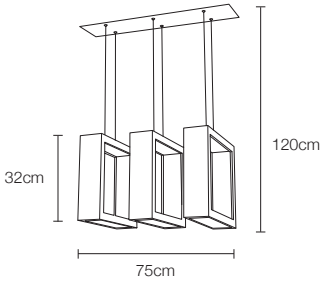

angle 2

by **mimax team**

6664 lumens 96W st pc

LED

angle 2

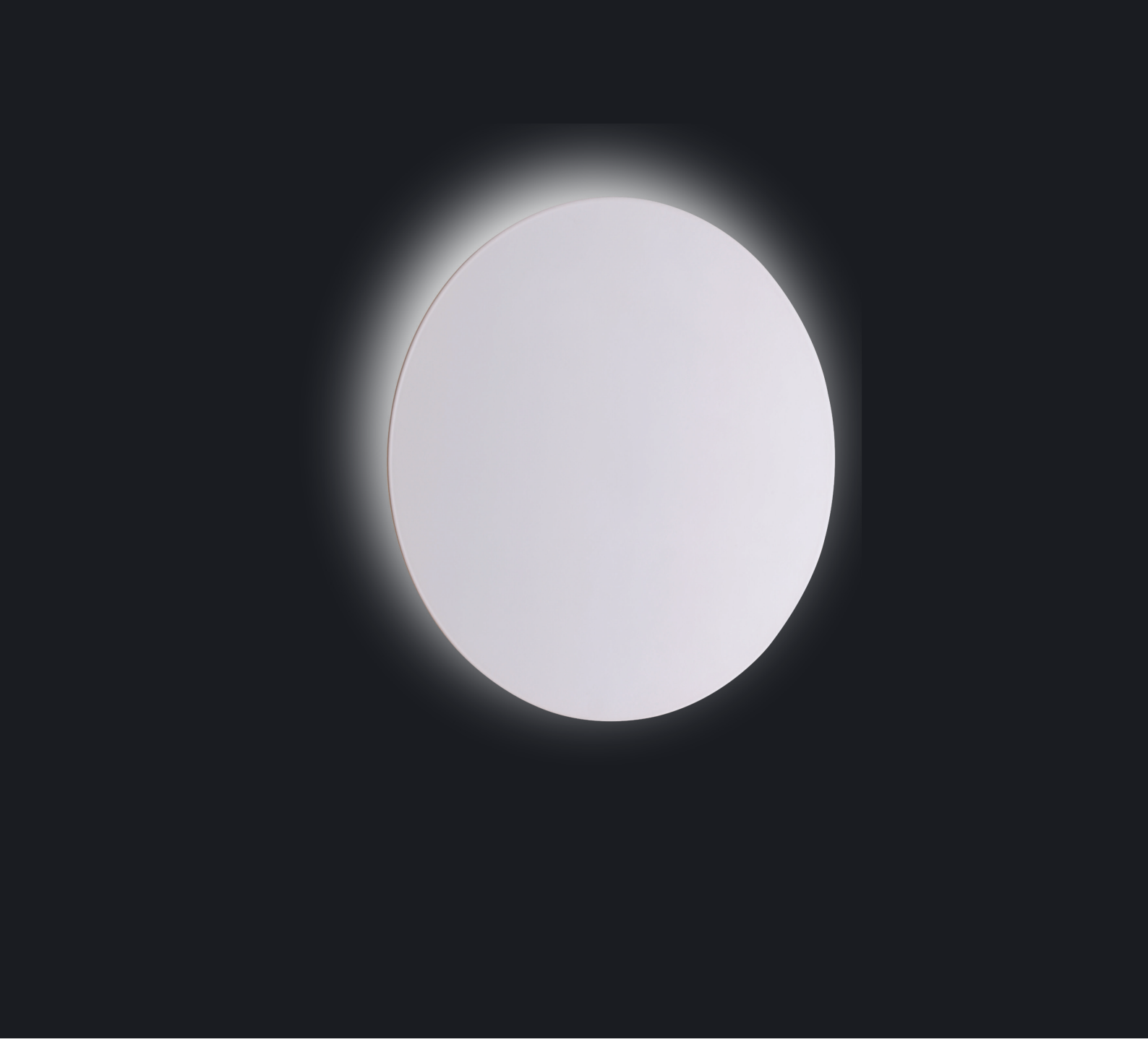

80

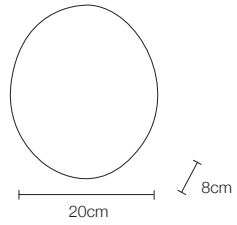

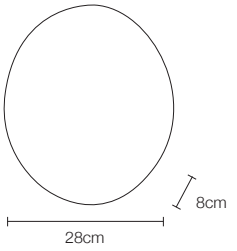

eclipsium

by **mbe design**

525 lumens 6W al pc

eclipsium 2

by **mbe design**

950 lumens 10W al pc

LED

eclipsium

82

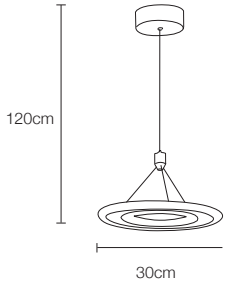

endurance

by **mimax team**

750 lumens 18W st pc

LED

endurance

84

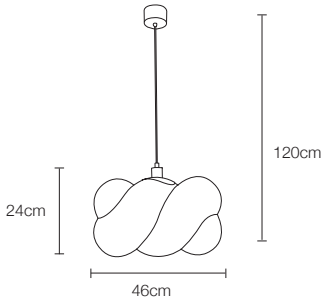

hug

by **Mario Mazzer**

E27 LED 15W inc.

st pc

LED

hug

86

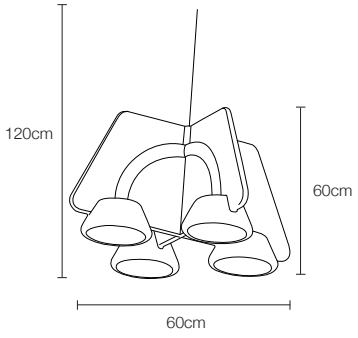

twin

by **Ezio Pescatori**

2250 lumens 36W st pc

LED

twin

88

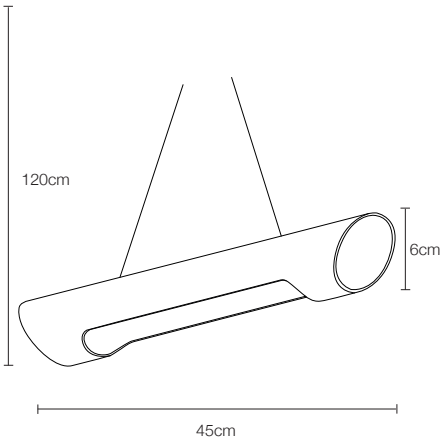

long

by **Ezio Pescatori**

650 lumens 7W st pc

LED

long

90

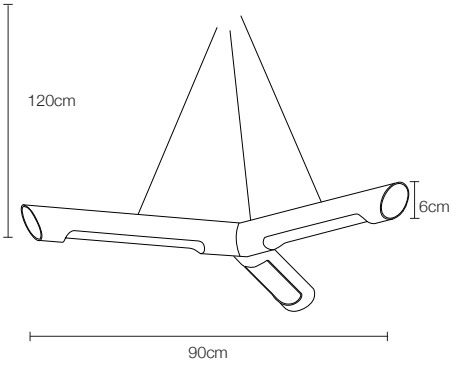

long 3

by **Ezio Pescatori**

1950 lumens 21W st pc

LED

long 3

92

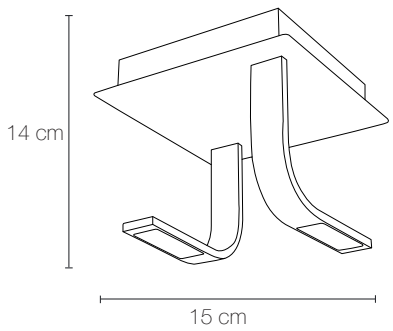

addagio

by **iseecows studio**

900 lumens 10W **IP44** al pc

LED

addagio

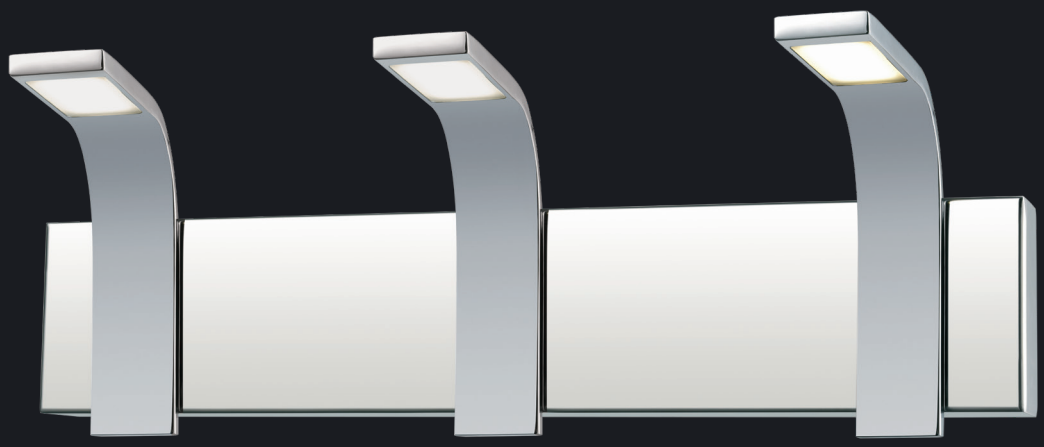

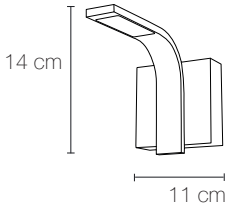

addagio W

by **iseecows studio**

450 lumens 5W **IP44** al pc

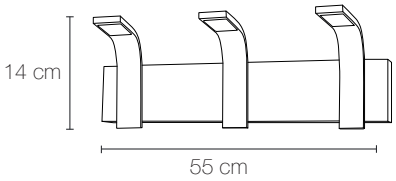

addagio W3

by **iseecows studio**

1350 lumens 15W **IP44** al pc

LED

addagio

96

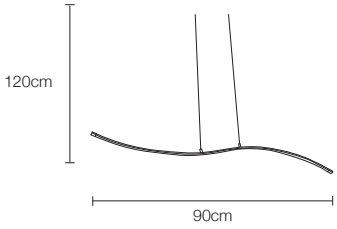

scorpius

by **mimax team**

1750 lumens 18W al pc

LED

scorpius

98

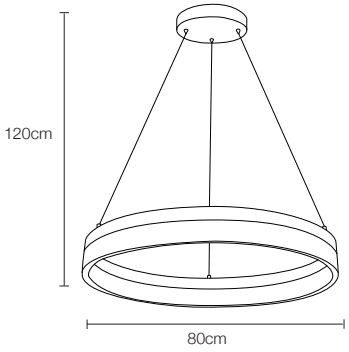

ring o’lite

by **mbe design**

3330 lumens

41W

al mt

LED

ring o’lite

100

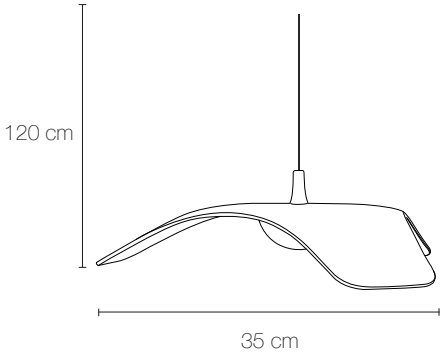

wing

by **mbe design**

945 lumens 10W

al pc

LED

wing

102

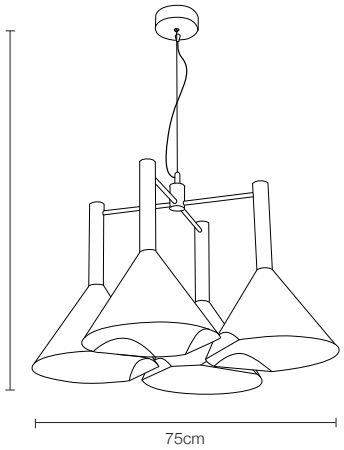

conika

by **Ezio Pescatori**

E27 LED 13W (not incl.)

st

LED

conika

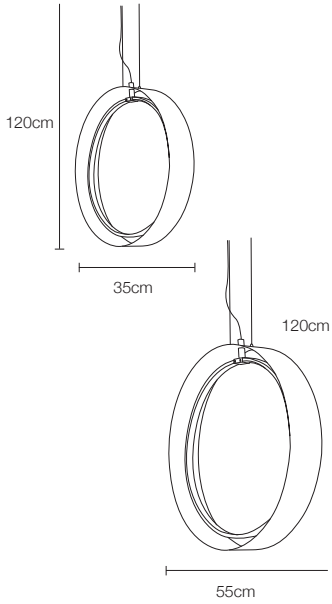

orbitron

by **iseecows studio**

650 lumens 8W al pc

orbitron max

by **iseecows studio**

650 lumens 8W al pc

LED

orbitron

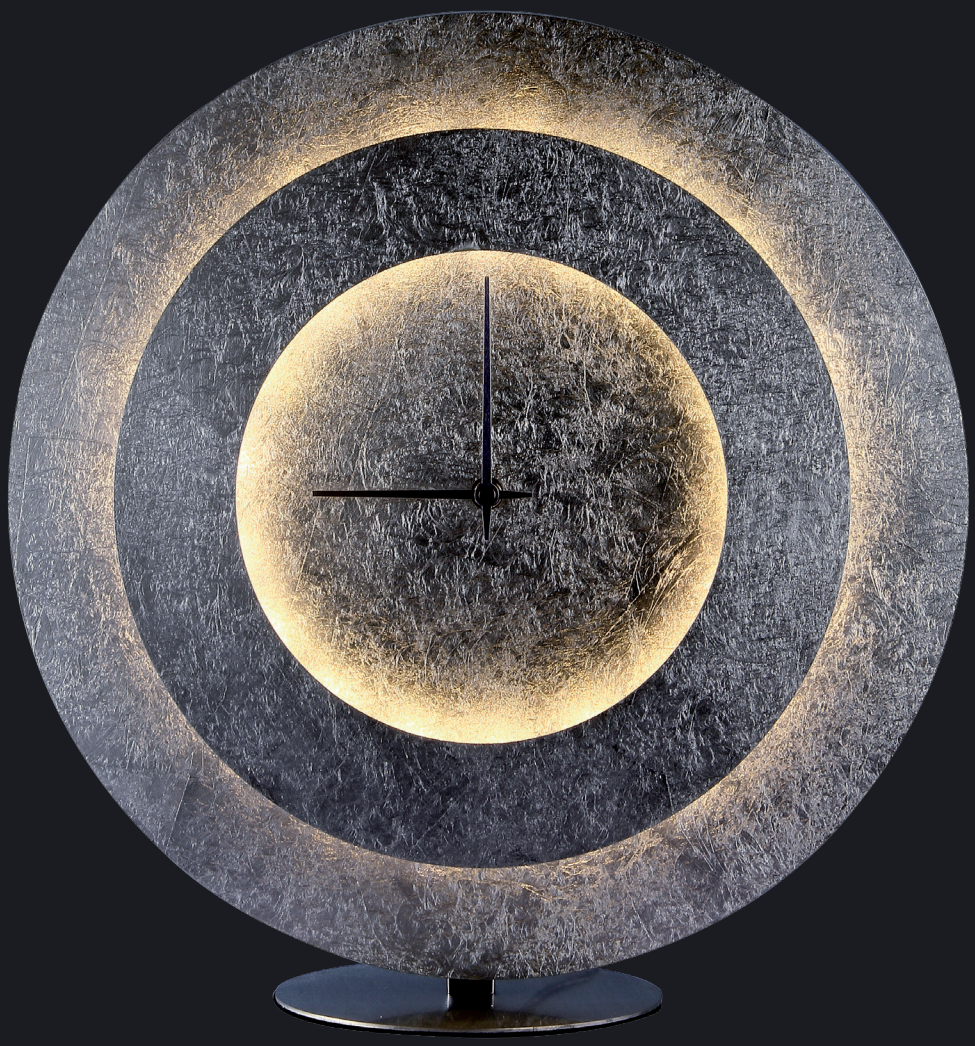

106

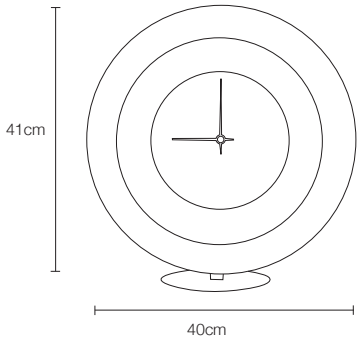

times

by **iseecows studio**

1640 lumens 18W al

LED

times

108

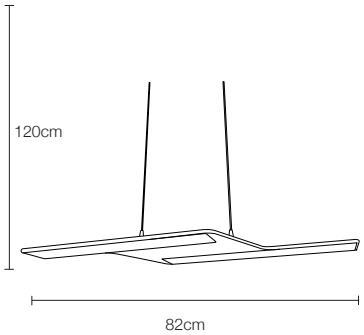

zeta

by **mbe design**

1975 lumens 28W al pc

LED

zeta

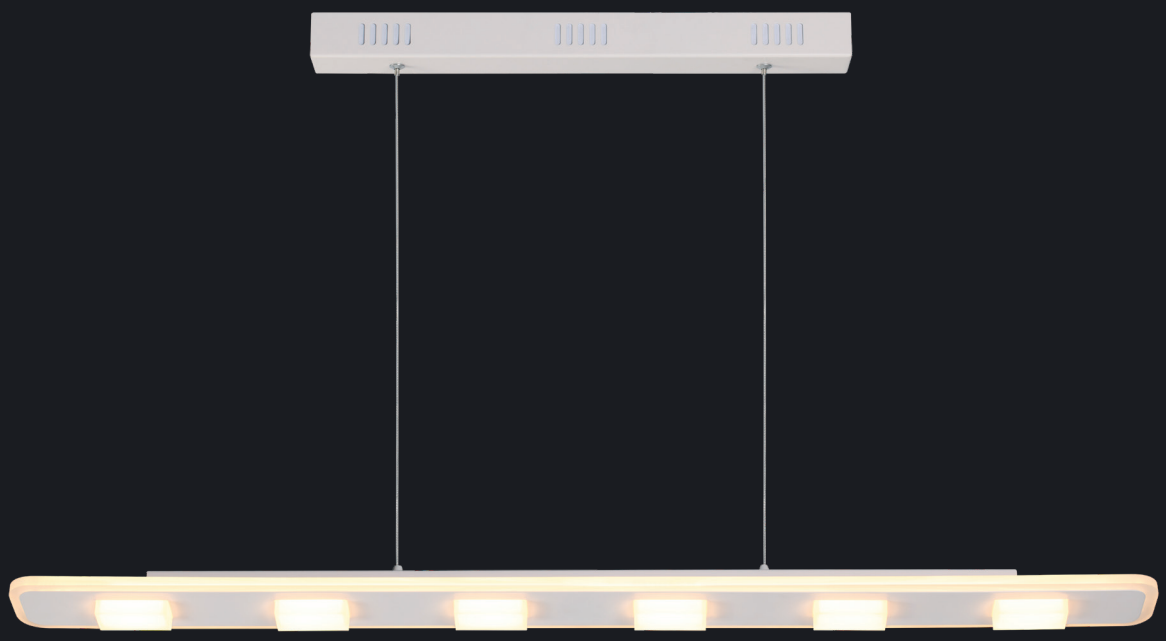

110

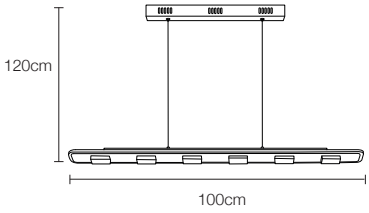

alchemy

by **iseecows studio**

5800 lumens 88W al mt

LED

alchemy

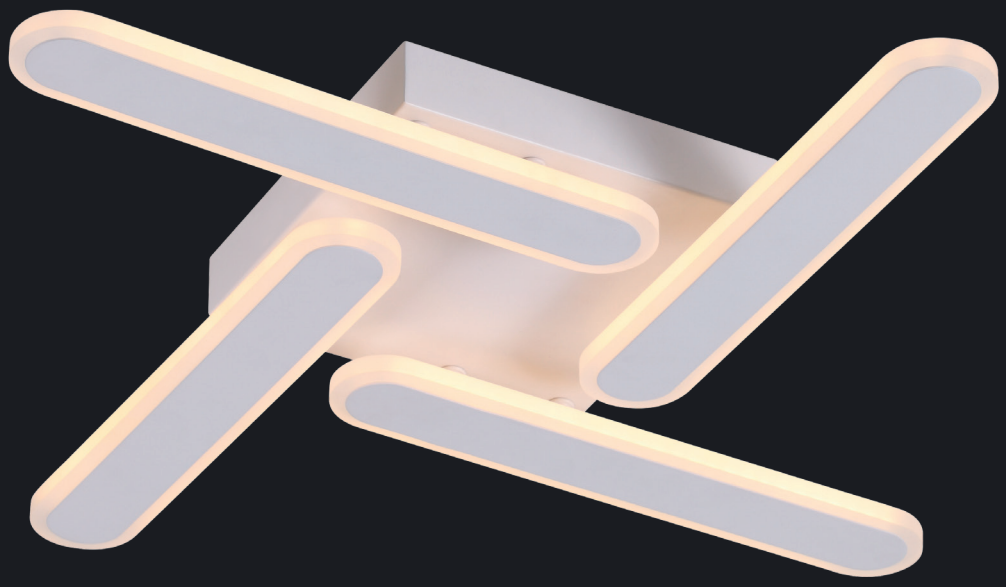

112

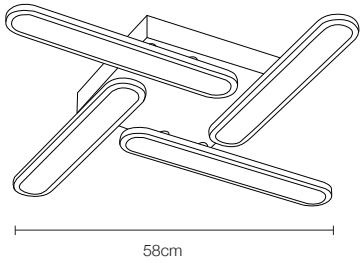

alchemy 2

by **iseecows studio**

3750 lumens

48W

al mt

LED

alchemy 2

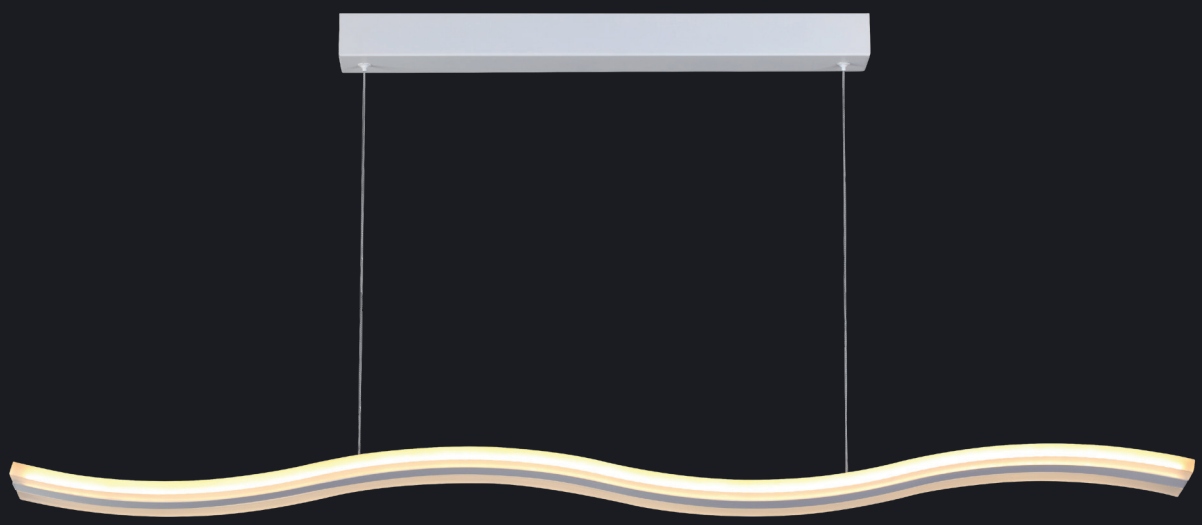

114

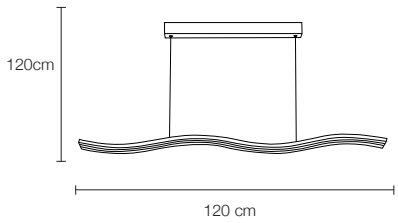

martina

by **iseecows studio**

4225 lumens

50W

al mt

LED

martina

116

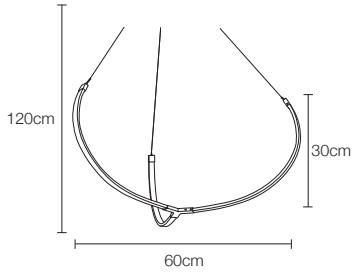

evolution

by **mbe design**

2150 lumens 24W al pc

LED

evolution

118

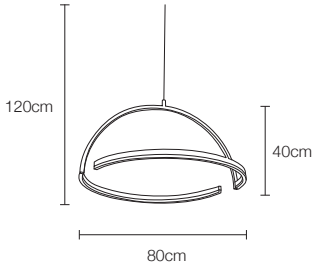

rendition 1

by **mbe design**

2224 lumens 48W al pc

LED

rendition

120

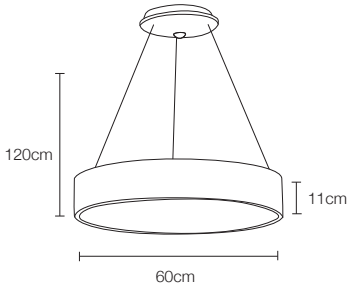

anneau d’or

by **mimax team**

2460 lumens 36W st pc

LED

anneau d’or

122

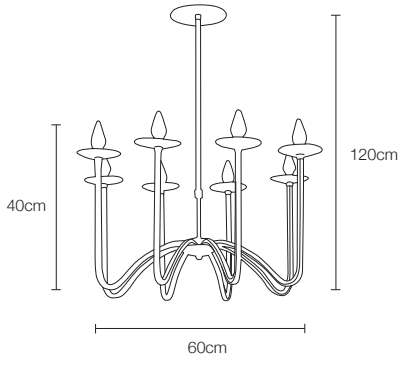

lucentia

by **mbe design**

3220 + 1440 lumens | 42W + 8 x G4 LED 3W

al pc

illuminated arms | brazos iluminados | bras lumineux | braccia iluminate | beleuchtete Arme

LED

lucentia

124

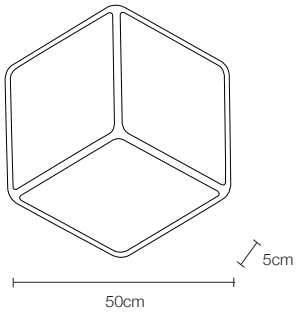

cubika

by **iseecows studio**

1400 lumens 25W al pc

3D visual effect

LED

cubika

126

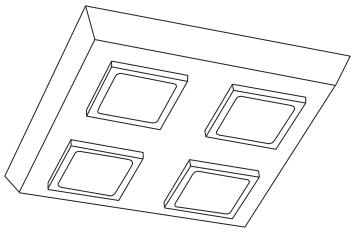

33cm

quattro

by **mbe design**

1750 lumens 24W al pc

LED

quattro

128

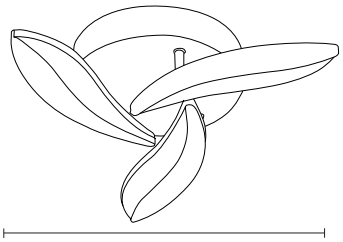

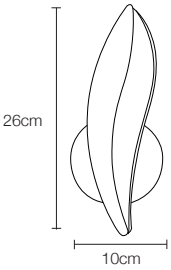

ville

by **mbe design**

2125 lumens 30W al pc

ville W

by **mbe design**

725 lumens 10W al pc

LED

ville

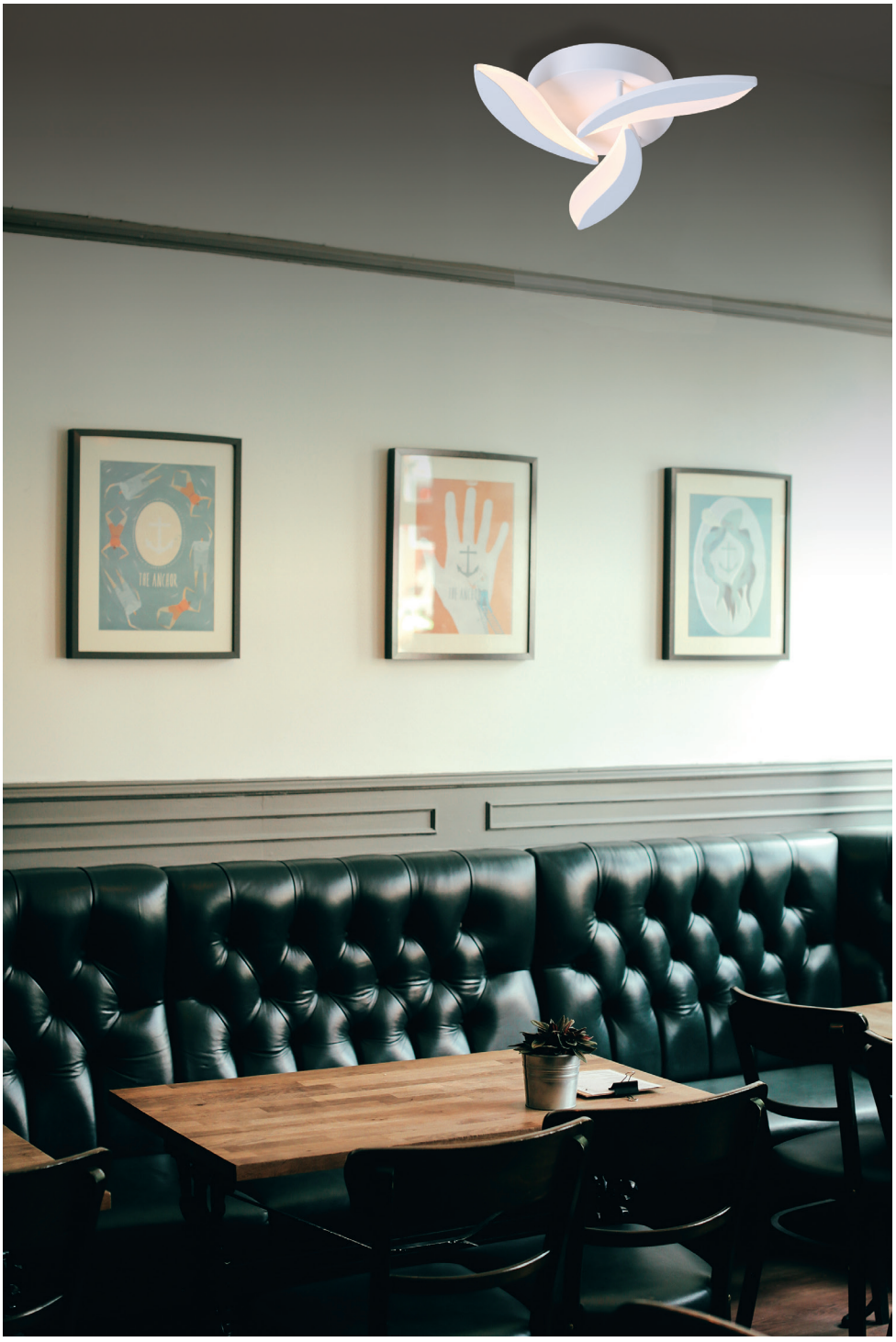

130

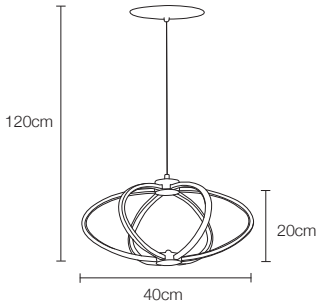

shine 1

by **mimax team**

1700 lumens 26W al pc

LED

shine 1

132

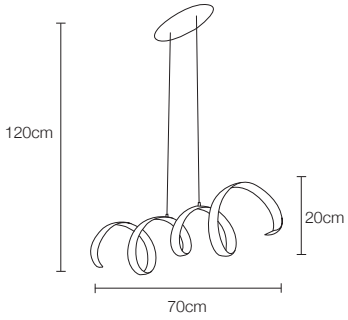

shine 3

by **mimax team**

2700 lumens 30W al pc

LED

shine 3

134

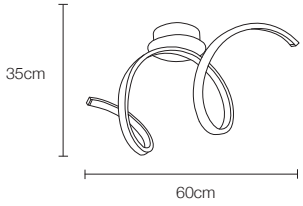

shine 4

by **mimax team**

1000 lumens 11W al pc

LED

shine 4

136

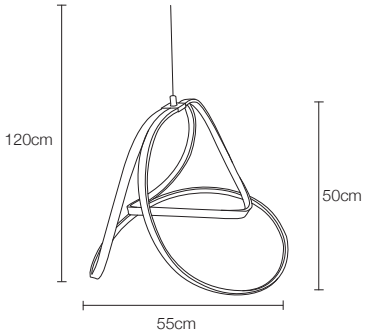

shine 5

by **mimax team**

4180 lumens

48W

2700K 6500K

al pc

LED

shine 5

138

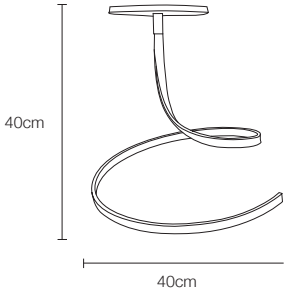

shine 6

by **mimax team**

1840 lumens 18W al pc

LED

shine 6

140

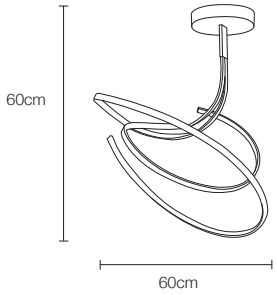

shine 7

by **mimax team**

3840 lumens 48W al pc

LED

shine 7

142

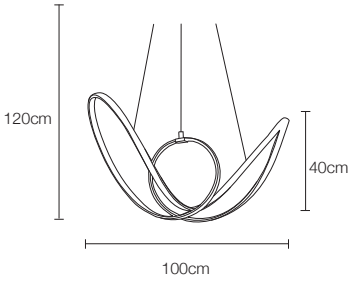

shine 8

by **mbe studio**

2980 lumens

48W

2700K 6500K

al pc

LED

shine 8

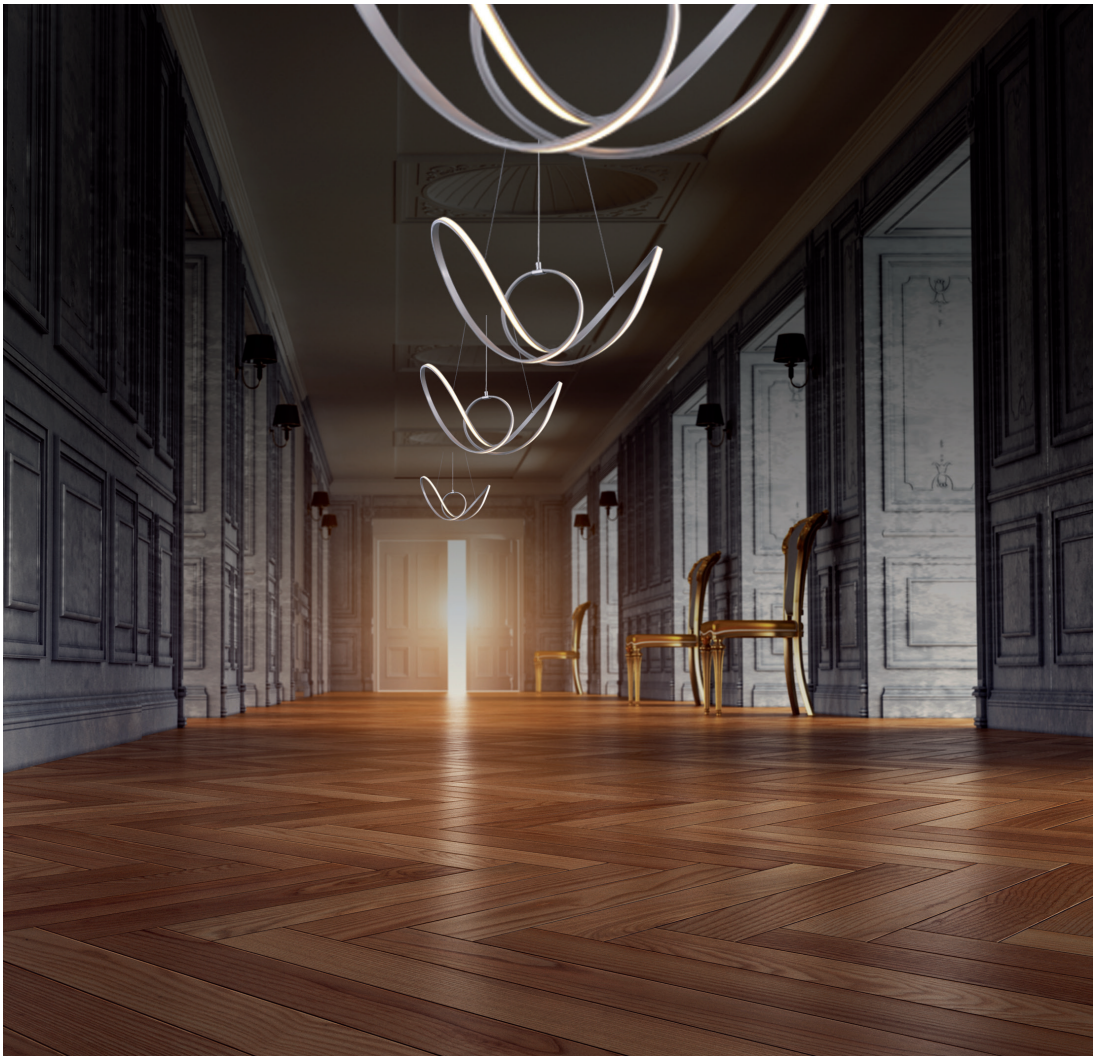

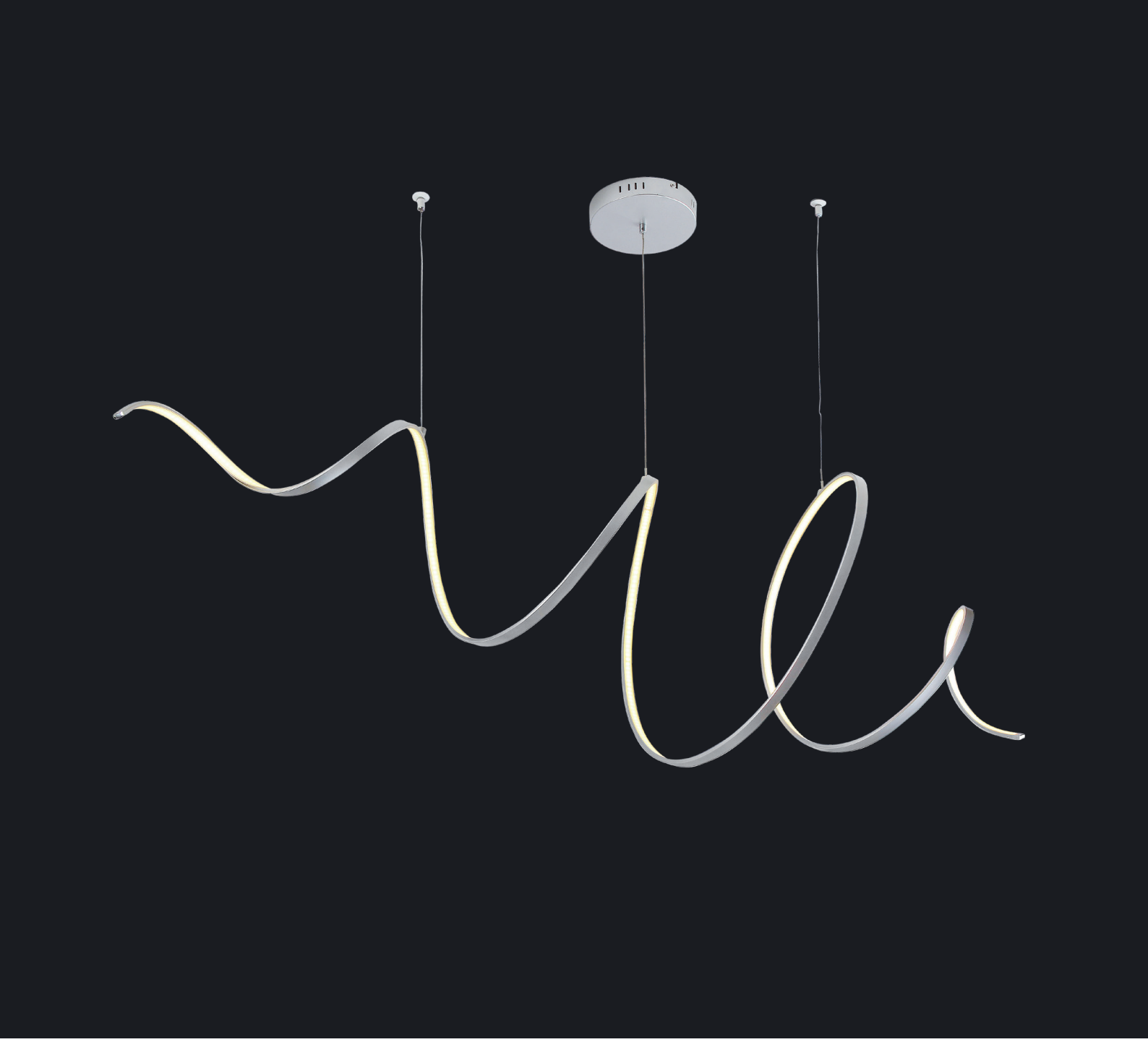

144

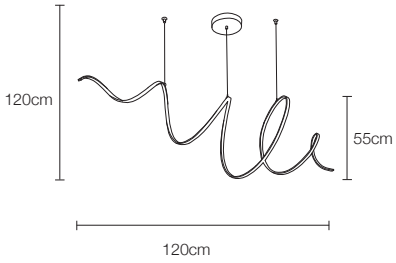

shine 9

by **mbe studio**

3380 lumens

60W

2700K 6500K

al pc

LED

shine 9

146

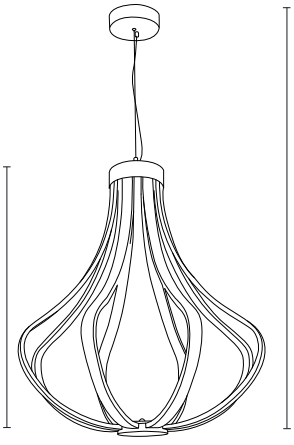

shine X

by **mbe studio**

4150 lumens 69W

al pc

LED

shine X

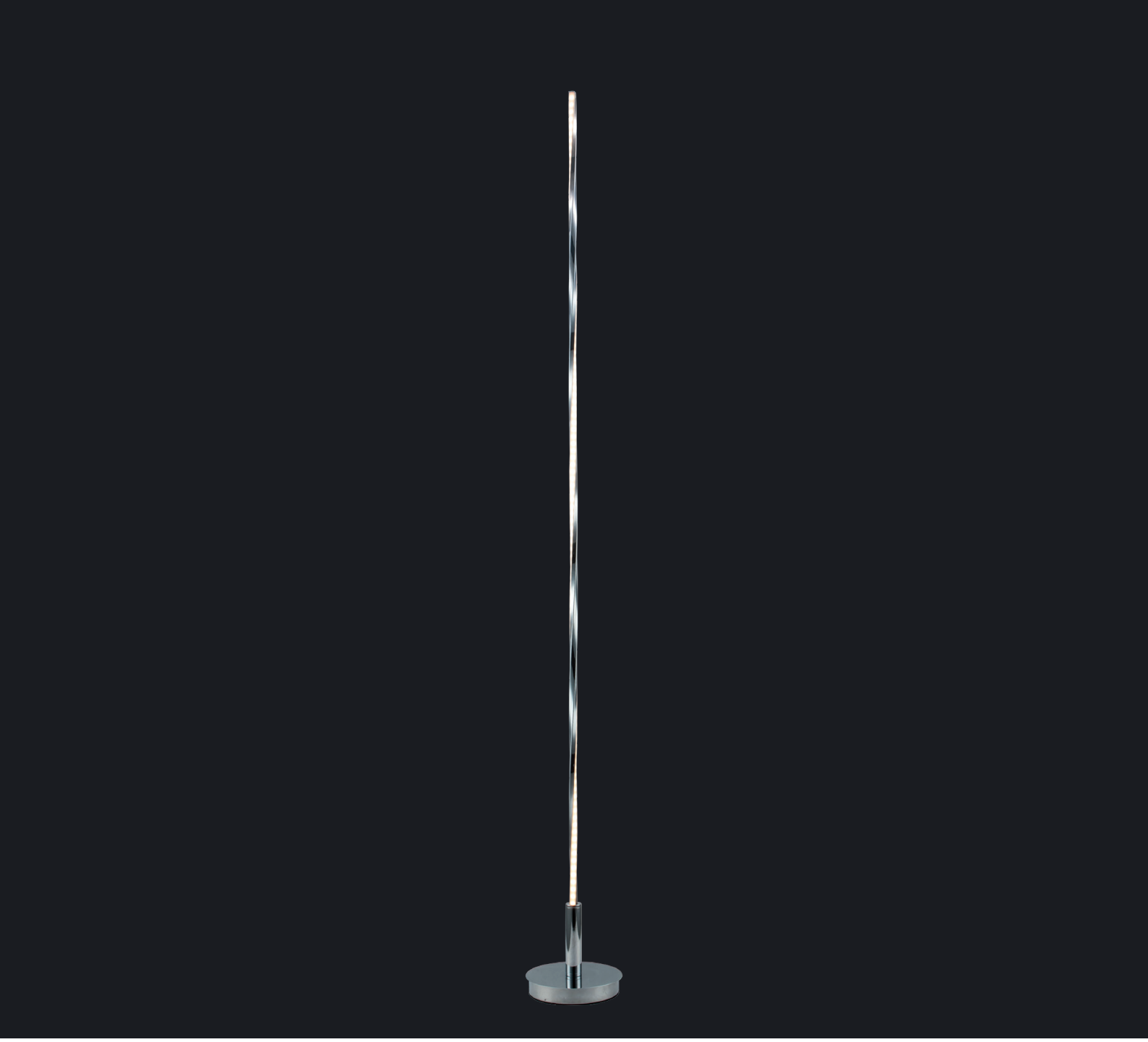

148

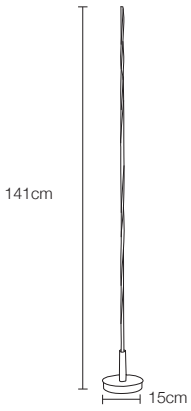

shine F

by **mimax team**

1140 lumens 14W al pc

LED

shine F

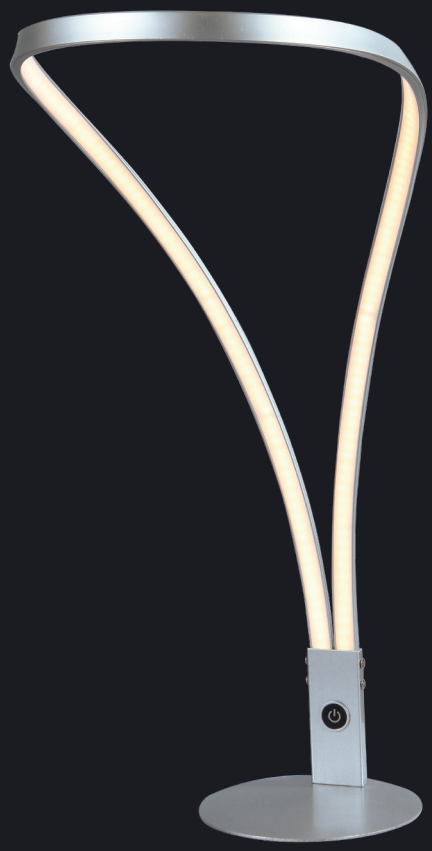

150

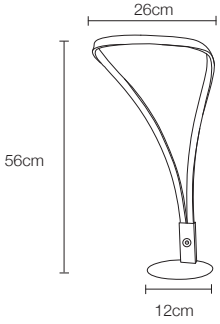

shine T

by **mimax team**

1440 lumens 18W al pc

LED

shine T

152

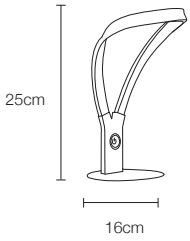

shine T1

by **mimax team**

366 lumens 6W al pc

LED

shine T1

154

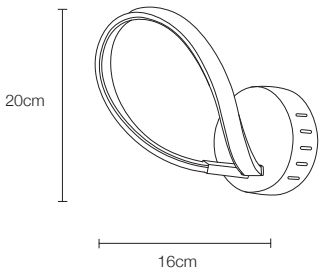

shine W

by **mimax team**

480 lumens 6W al pc

LED

shine W

156

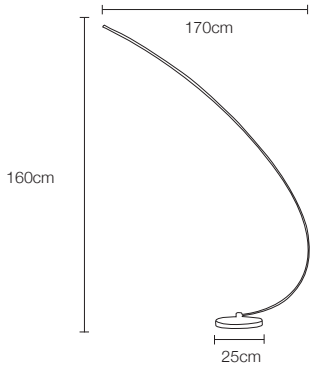

delta

by **mimax team**

1400 lumens 18W al pc

LED

delta

158

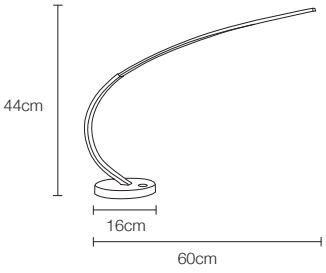

supra

by **mimax team**

540 lumens 6W st pc

LED

supra

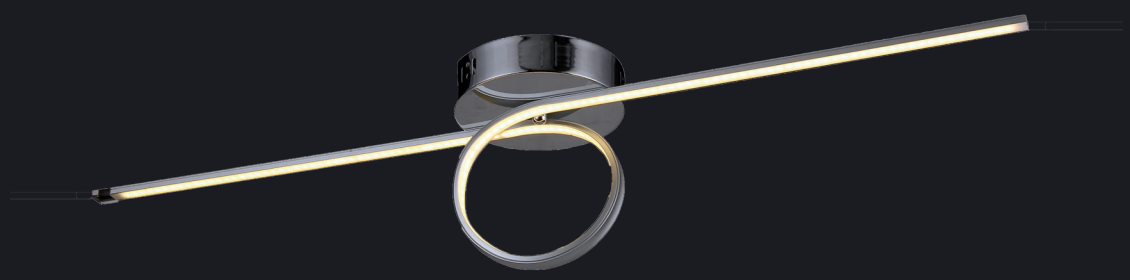

160

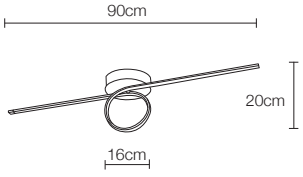

ventus

by **mimax team**

1440 lumens 18W al pc

LED

ventus

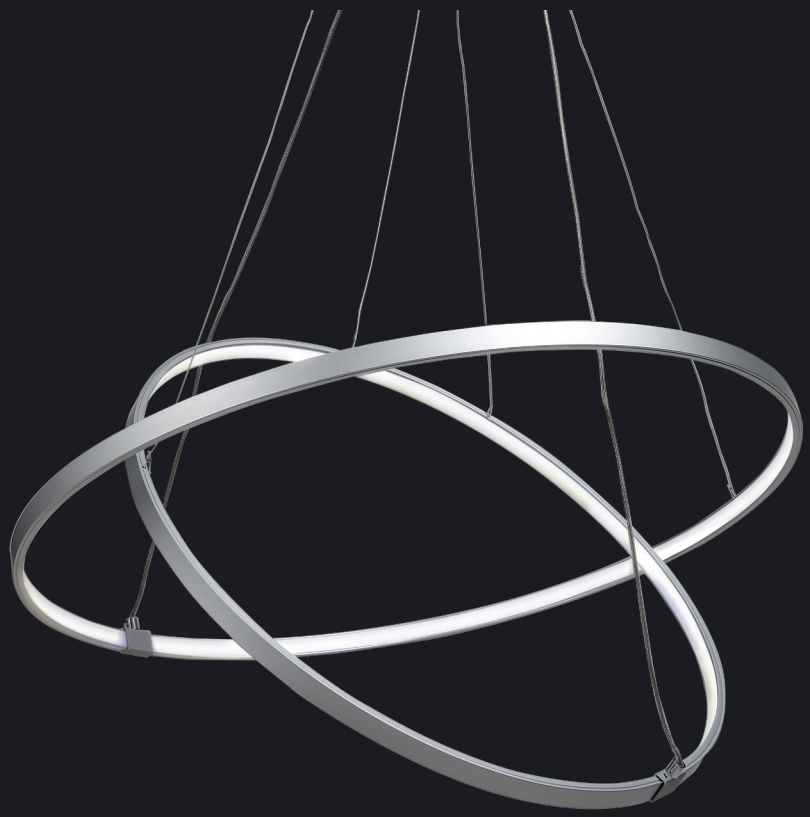

162

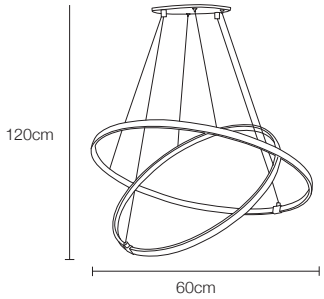

omega

by **mimax team**

3680 lumens 41W al pc

LED

omega

mimax

FANS
FANS
FANS

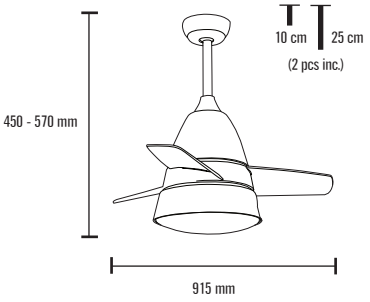

alize

ST | ABS | Dif. PC | Timer

25°max. | AC motor | 24w 1950 Lm | LED 2700K 6500K | 99 m3/min

W	18	36	60
RPM	180	240	300

LED

alize

Make your Dreams Happen
THIS IS A TEST
IF YOU CAN
READ THIS
HOME SWEET HOME

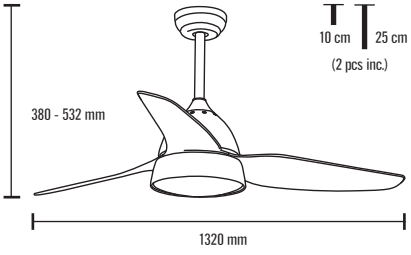

brisa

ST | ABS | Dif. PC | Timer

15°max. | DC motor | 18w 1500 Lm | LED 2700K 6500K | 120 m3/min

W	6	10,7	16,3	23	38
RPM	100	140	167	190	210

LED

brisa

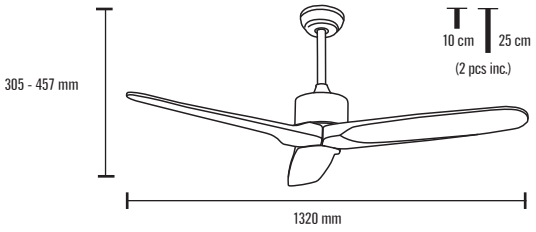

etesian

ST

WOOD

Timer

15°max.

AC motor

120 m3/min

W	21	41	71
RPM	105	155	200

170

etesian

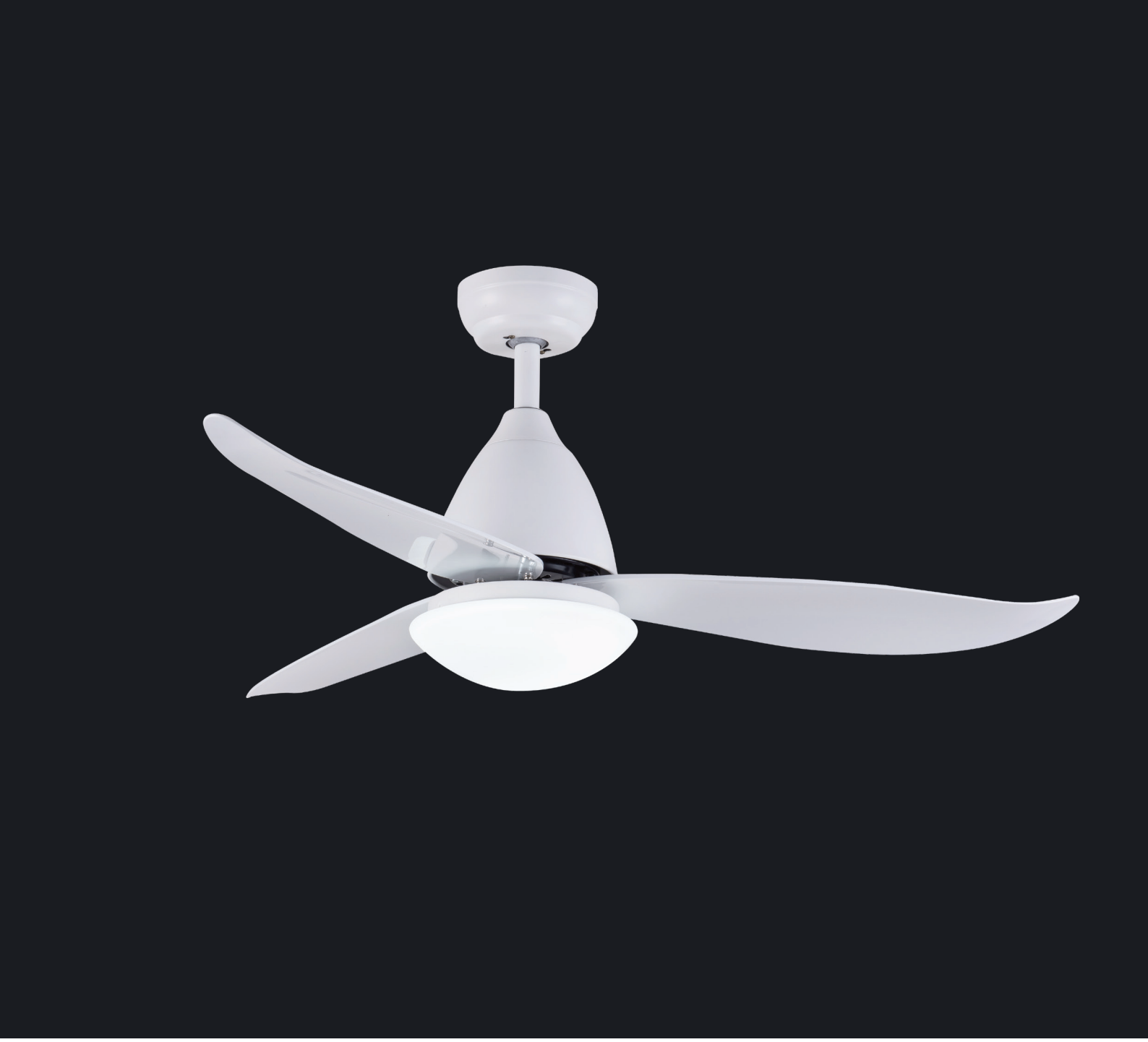

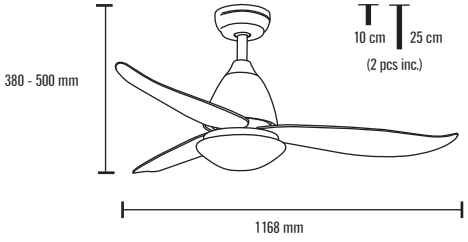

kona

ST | ABS | Dif. PC | Timer

25°max. | AC motor | 24w 1950 Lm | LED 2700K 6500K | 120 m3/min

W	20	40	60
RPM	180	220	260

LED

kona

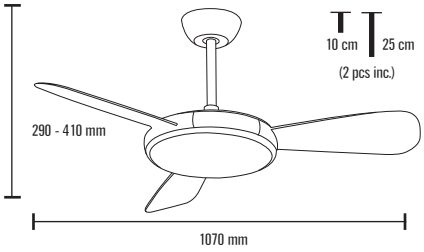

leste

ST ABS Dif. GL Timer

25 °max. DC motor 30w 1850 Lm LED 2700K 6500K 124 m3/min

W	3,5	8	14	22	35
RPM	95	120	165	200	240

174

LED

leste

levanto

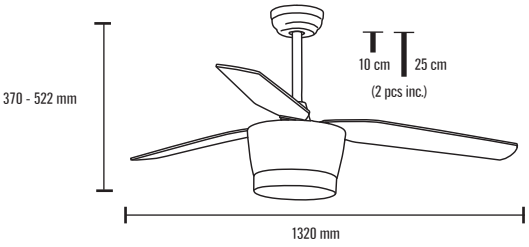

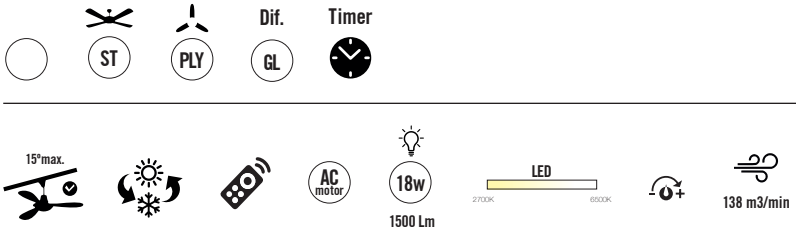

176

W	21	42	70
RPM	120	178	218

LED

levanto

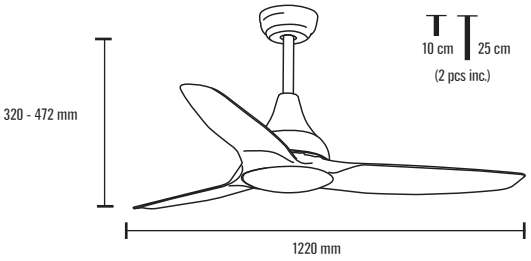

leveche

ST ABS Dif. GL Timer

15°max. DC motor 15w 1210 Lm LED 2700K 6500K 165 m3/min

W	6	8	12	17	24
RPM	140	164	189	210	240

178

LED

leveche

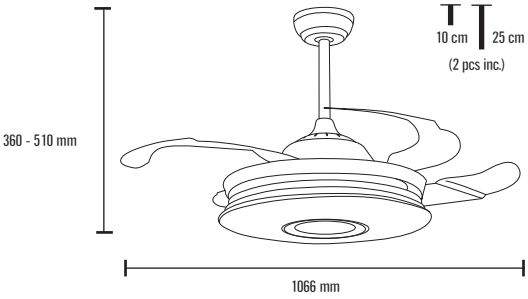

maestro

ST | Dif. PC | Timer | PC abatibles/folding

15°max. | AC motor | 32w 2935 Lm | LED 2700K 6500K | 135 m3/min

W	50	35	21
RPM	220	190	149

180

LED

maestro

i-lamp app

RGB
control

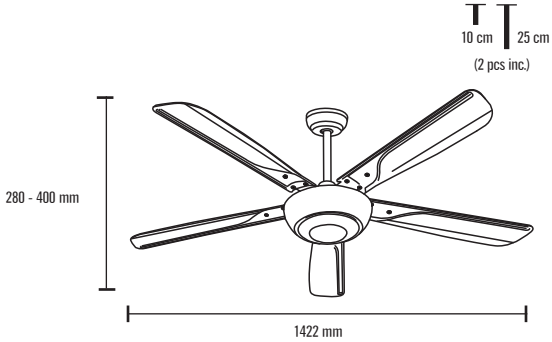

monsoon

Timer

ST

ABS

25°max.

AC motor

146 m3/min

W	21	45	65
RPM	148	180	205

monsoon

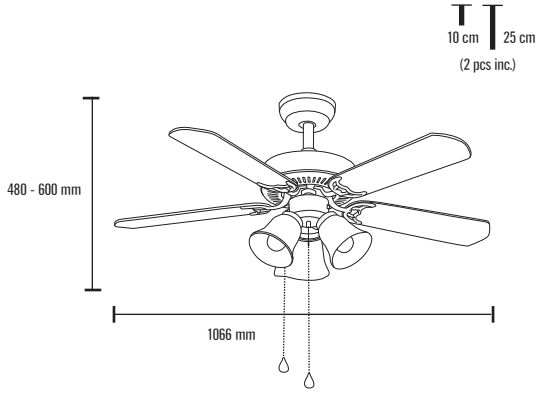

santa ana

ST PLY Dif. GL

25°max. AC motor 3xE27 120 m3/min

W	60	40	20
RPM	245	205	180

santa ana

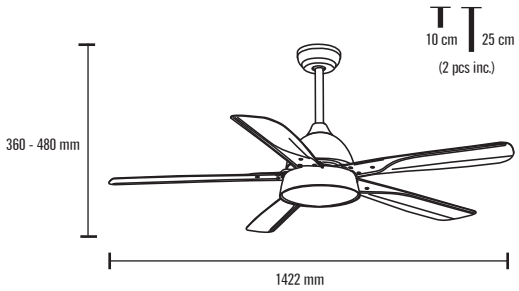

shamal

ST | ABS | Dif. PC | Timer

25°max. | AC motor | 24w 1950 Lm | LED 2700K 6500K | 146 m3/min

W	21	45	65
RPM	148	180	205

186

LED

shamal

For what it's worth: it's never too late,
or in my case, too early to be whoever you
want to be. There's no time limit, stop
whenever you want. You can change
or stay the same, there are no rules to
this thing. We can make the best
or the worst of it. I hope you make the
best of it. And I hope you see things that
startle you. I hope you feel things you have
never felt before. I hope you meet
people with a different point of view. I
hope you live a life you're proud of.
If you find you are not, I hope you have
the courage to start all over again.
- F Scott Fitzgerald

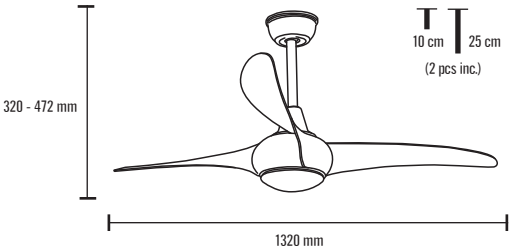

sirocco

ST | ABS | Dif. GL | Timer

25°max. | DC motor | 12w 1172 Lm | LED 2700K 6500K | 120 m3/min

W	4	9	15	23	38
RPM	89	119	141	163	185

LED

sirocco

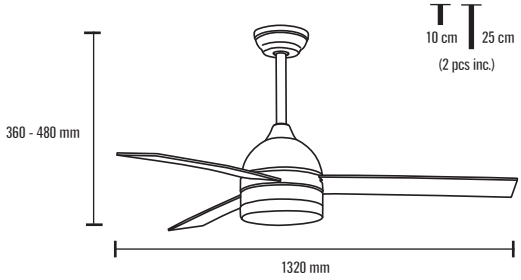

tramuntana

ST PLY Dif. PC Timer

25°max. AC motor 24w 1950 Lm LED 2700K 6500K 138 m3/min

W	21	45	65
RPM	180	200	245

190

LED

tramuntana

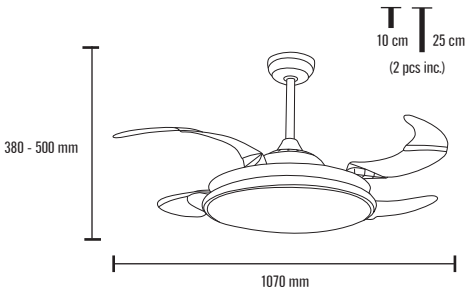

zephyr

ST | Dif. PC | Timer | PC abatibles/folding

25°max. | AC motor | 30w 1950 Lm | 48w 2750 Lm | LED 2700K 6500K | 120 m3/min

W	65	45	22
RPM	235	200	170

192

LED

zephyr

symbols

	Español	English	Français	Deutsch	Italiano	Català
	blanco	white	blanc	weiss	bianco	blanc
	blanco lacado	lacquered white	blanc lacat	weiss lackiert	bianco laccato	blanc lacat
	plata	silver	argent	silber	argento	plata
	cromo	chrome	chrome	chrom	cromo	crom
	negro	black	noir	schwarz	nero	negre
	pan de plata	silver leaf	feuille d'argent	blattsilber	foglia d'argento	pa de plata
	pan de oro	gold leaf	feuille d'or	blattgold	foglia d'oro	pa d'or
	cristal	crystal	crystal	crystal	cristallo	cristall
	niquel satinado	satin nickel	nickel satiné	nickel matt	nichel satinato	niquel satinat
	oro mate rosé	mat gold rose	or mat rosé	gold matt rose	oro rosé	or rosé
	blanco/negro	black/white	blanc/noir	schwarz/weiss	bianco/nero	blanc/negre
	blanco/gris brillo	shinny grey/ white	gris brillant/ blanc	glänz.Grau/ weiss	grigio brillante/ bianco	gris brillant/blanc
	negro/cobre	black/copper	noir/cuivre	schwarz/kupfer	nero/rame	negre/coure
	blanco/cobre	white/copper	blanc/cuivre	weiss/kupfer	bianco/rame	blanc/coure
	mando a distancia	remote control	télécommande	fernbedienung	telecomando	comandament a distància
RGB	mando RGB	RGB remote control	télécommande RGB	RGB fernbedienung	telecomando RGB	comandament RGB
	regulable	dimmable	régulable	mit dimmer	regolabile	regulable
2700K 6500K	K regulable	K dimmable	K régulable	K mit dimmer	K regolabile	K regulable
	touch control	touch control	touch control	touch control	touch control	touch control
gla	vidrio óptico	optic glass	verre optique	optischem glas	vetro ottico	vidre òptic
opal	cristal opal	opal glass	verre opalin	opal glas	vetro opal	vidre opal
tex	textil	textile	textile	textil	tessile	tèxtil
pc	policarbonato	polycarbonate	polycarbonate	polykarbonate	policarbonato	policarbonat
al	aluminio	aluminium	aluminium	aluminium	alluminio	alumini
st	acero	steel	acier	stahl	acciaio	acer
mt	metacrilato	methacrylate	méthacrylate	methacrylate	metacrilato	metacrilat
w	madera	wood	bois	holz	legna	fusta
acr	acrílico	acrylic	acrylique	acryl	acrilico	acrílic

LED

index

addagio 92
addagio w /addagio w3 94
aeris 40
alchemy 110
alchemy 2 112
alize 166
angle 2 78
anneau d'or 120
archilux 48
armonia 28
baculus 56
balance 38
beacon / beacon 2 44
beacon f 46
brisa 168
conika 102
cubika 124
delta 156
drive 10
duplex 8
eclipsium/ eclipsium 2 80
endurance 82
etesian 170
evolution 116
fidelia 22
fidelia 2 24
fidelia 3 26
gregal 32
hannah t 52
hug 84
inflexus 4
kona 172
leste 174
levanto 176
leveche 178
logo / logo b 54
long 88
long 3 90
lucentia 122
luminika 64
luminika f 66
maestro 180
manet 16
martina 114
matrix 50
mistral 34
mistral 2 36
monsoon 182
nice 76
omega 162
orbitron /orbitron max 104
orion 6
phoenix f 58
phoenix t 60
pinnacle 12
pinnacle w 14
quattro 126
rendition 1 118
ring o'lite 98
rodium 74
santa ana 184
saphir 42
scorpius 96
sferika 62
shamal 186
shine 1 130
shine 3 132
shine 4 134
shine 5 136
shine 6 138
shine 7 140
shine 8 142
shine 9 144
shine f 148
shine t 150
shine t1 152
shine w 154
shine x 146
sirocco 188
spectrum 68
stella 18
supra 158
times 106
torch 70
torch f 72
tramuntana 190
trivial 20
twin 86
ventus 160
ville / ville w 128
wing 100
xaloc 30
zephyr 192
zeta 108

MIMAX LIGHTING, S.L.
C/Gran Bretanya, 43
08700 Igualada (Barcelona)
Tel./fax +34 938 044 621
info@mimaxlighting.com

mimaxlighting.com