001270528-000_[2009]_01-03

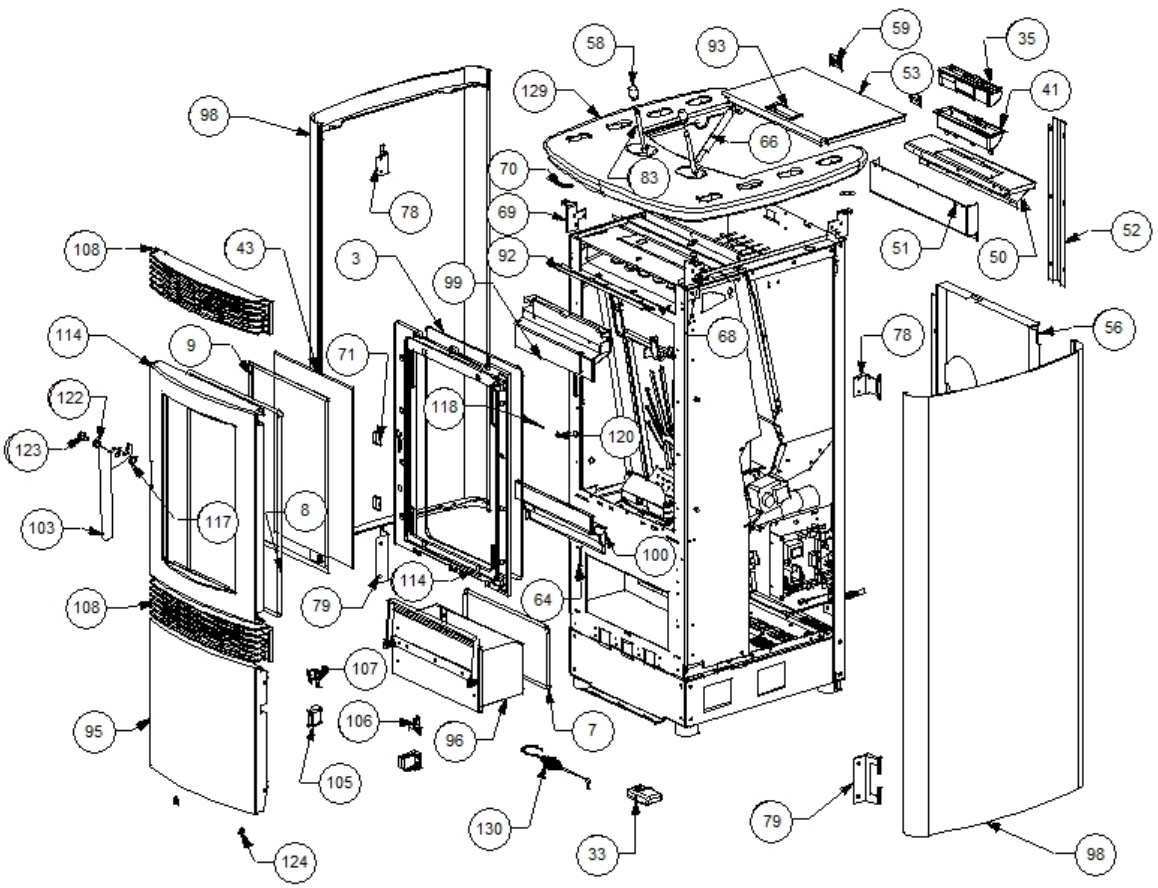


www.pieces-de-poele.com